ZEBEX
www.zebex.com

User's Manual

2D Image Fixed Industrial Scanner

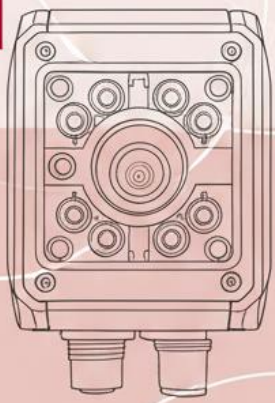

Revision History

Changes to the original manual are listed below:

Version	Date	Description of Version
1.0	09/23/2025	Initial release
1.1	02/02/2026	Voltage/software info update
1.2	08/04/2026	Adapter description update
1.3	11/20/2026	Updated mounting height in installation guidelines

Important Notice

No warranty of any kind is made in regard to this material, including, but not limited to, implied warranties of merchantability or fitness for a particular purpose. We are not liable for any errors contained herein or incidental or consequential damages in connection with furnishing, performance or use of this material.

No part of this document may be reproduced, transmitted, stored in a retrieval system, transcribed, or translated into any language or computer language in any form or by any means electronic, mechanical, magnetic, optical, chemical, manual or otherwise, without express written consent and authorization.

We reserve the right to make changes in product design without reservation and without notification. The material in this guide is for information only and is subject to change without notice.

All trademarks mentioned herein, registered or otherwise, are the properties of their various respective owners.

Copyright © 2026. All rights reserved.

Guidance for Printing

This manual is in A5 size. Please double check your printer setting before printing it out.

Adjustments: Do not attempt any adjustments or alteration of this product. Do not remove the protective housing of the scanner. There are no user-serviceable parts inside.

Optical: The use of optical instruments with this product will increase the eye hazard. Optical instruments include binoculars, magnifying glasses, and microscopes but do not include normal eye glasses worn by the user.

CAUTION: Use of controls or adjustments or performance of procedures other than those specified herein may result in hazardous radiation exposure.

For CE-countries

This scanner is in conformity with CE standards. Please note that an approved, CE-marked power supply unit should be used in order to maintain CE conformance.

Table of Contents

Important Notice....ii
Product Overview....1
Product Description....1
Key Features....1
Device Overview....2
Indicator Panel Functions....3
Connections and Wiring....4
Accessories....5
Dimension....5
Setup & Operation....6
Installing the Device....6
Installation Guidelines....7
Power Connection....8
Communication Connection....9
I/O Wiring Guide....11
Overview....11
Input Electrical Characteristics....11
Output Electrical Characteristics....11
Internal Wiring....12
External I/O Wiring....14
RS-232 Serial Port....17
Client Operation....18
Software Connection....18
PC Network Configuration....19
Changing the PC IP Address....19
Changing the Barcode Reader IP Address....21
Firmware Upgrade....22
Function Overview....23
Interface Overview....23
Code Reading Configuration....24
Template Selection....24
Image Acquisition....25
Adaptive Parameter Adjustment....26
Camera Settings....27
Light Source Settings....28
Algorithm Configuration....29
Code Reading Type....29
Algorithm Parameters....30
ROI (Region of Interest) Settings....32

Manual ROI 33
Batch ROI (Checkerboard) 34
Clear All ROIs 35
Trigger Configuration 36
Trigger Types 36
Continuous Trigger 37
I/O Trigger 38
Software Trigger 40
Network Trigger 41
Serial Port Trigger 46
Sensor Trigger 47
Start Trigger Settings 48
Stop / End Trigger Settings 48
Format Configuration 49
Data Filtering 50
Data Processing 52
Network Data Processing 54
Output Configuration 55
Communication Configuration 57
TCP Server 57
Modbus TCP 58
MC Protocol 59
TCP Client 60
EtherNet/IP 61
Profinet 62
Fins 63
HTTP 64
Serial Protocol 65
Modbus RTU 66
Device Management 67
Settings 68
Device Settings 68
Firmware Update 70
Backup & Restore 70
Log 70
Storage Settings 71
Status Tools 72
Frequently Asked Questions 73

Product Overview

Product Description

The ZX-3020 Series Smart Code Reader is designed for versatile applications across industries such as consumer electronics, pharmaceuticals, food, semiconductors, and automotive components. Using advanced sensors and optical components, the device captures images of target objects and decodes barcodes through its built-in deep learning algorithms. Detection results can be transmitted via multiple communication interfaces for seamless integration.

Key Features

- Integrated deep learning algorithm for ultra-fast barcode localization and decoding
- Motorized zoom lens supporting long-distance and wide-field reading
- Dual red/white illumination with four independently controlled light sources, including polarized lighting for complex scenarios
- Capable of reading extremely small codes at varying distances
- Rich I/O interface for multiple input and output signal connections
- IP67 protection rating, ensuring reliable performance in harsh industrial environments

Device Overview

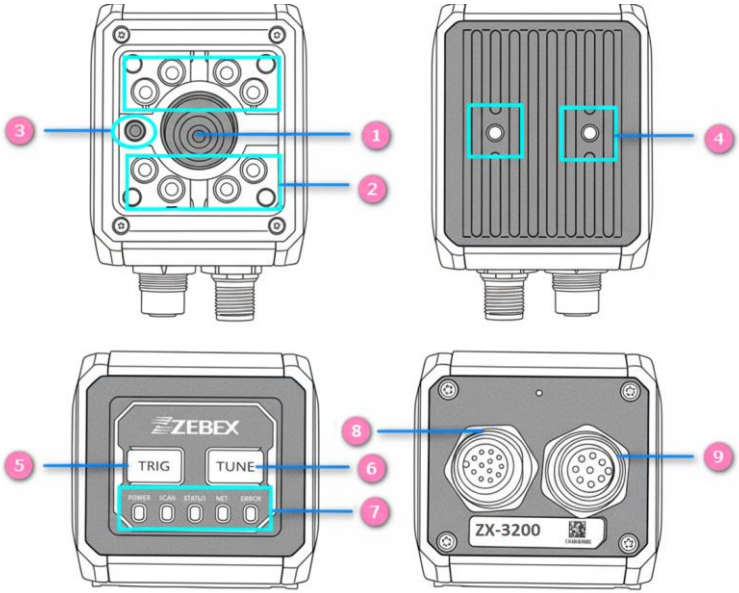

#	Component	Function
1	Image Sensor	Captures images of the target object
2	Illumination	Built-in red/white light source
3	Aiming Light	Indicates the image center position
4	Mounting Holes	For reader installation
5	TRIG Button	Trigger key for manual activation
6	TUNE Button	Automatic parameter adjustment key
7	Status Indicators	Indicator light panel
8	12-Pin Interface	M12, 12-pin connector
9	8-Pin Interface	M12, 8-pin connector

Indicator Panel Functions

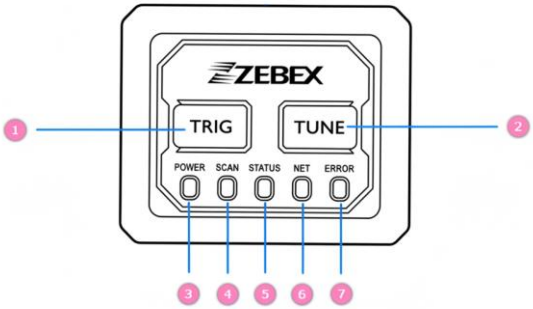

#	Indicator	Description
1	RIG Button	Trigger key for manual activation
2	TUNE Button	Automatic parameter adjustment key
3	Power Indicator	Green light on when the device is operating normally
4	Configuration Indicator	Green light on when the trigger button is successfully activated
5	OK/NG Indicator	Green light on when reading is successful; red light on when reading fails
6	Network Indicator	Green light on when connected; flashing during data transmission
7	Error Indicator	Off by default; error light on when a device fault occurs

Connections and Wiring

M12-12 Pin Male Connector

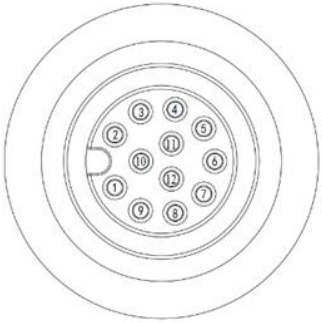

Pin	Wire Color	Signal
1	Yellow	OUT2
2	Green with Yellow Stripe	RS232_TxD
3	Brown	RS232_RxD
4	Pink	RS232_GND
5	Purple	IN1
6	White	IN_COM
7	Red	VIN_24V
8	Black	DGND
9	Green	OUT_COM
10	Pink	IN0
11	Blue	OUT0
12	Gray	OUT1

M12-8 Pin Male Connector

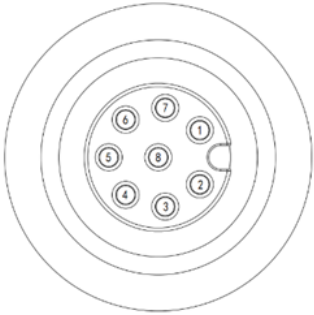

Pin	Wire Color
1	Orange/White
2	Orange
3	Green/White
4	Green
5	Blue/White
6	Blue
7	Brown/White
8	Brown

Accessories

Item	Description
M12-12 Pin Cable	M12 male connector, supports RS232 communication, power input, and I/O ports, 3 m length
M12-8 Pin Cable	M12 male connector to RJ45 Ethernet cable, 3 m length
Power Supply	24V power adapter (optional)
Mounting Accessories	L-shaped mounting bracket with screws

Dimension

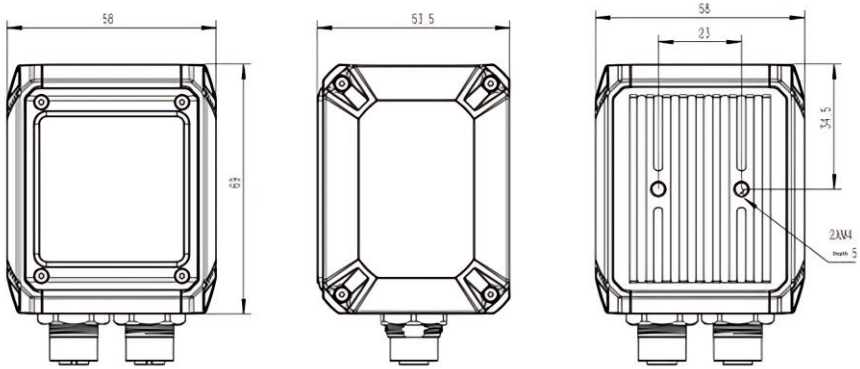

Setup & Operation

Installing the Device

1. Mount the device onto the fixed bracket using screws, then secure the bracket to the target structure.
2. Connect the M12-12 Pin cable. Ensure the connector is properly aligned before tightening the locking screws.
3. Connect the M12-8 Pin cable. Ensure the connector is properly aligned before tightening the locking screws.

(Refer to diagrams below for installation and field-of-view.)

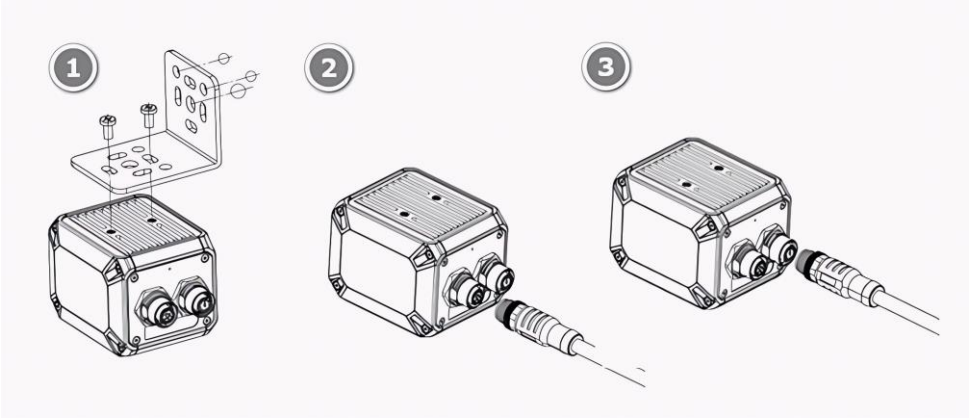

Installation Guidelines

- **Mounting Height:** 100 mm to 1000 mm (1MP), 40 to 1000 mm (2.3MP)
- **Mounting Angle:** Tilt the device 10–15° to minimize glare and reflection.
- **Focal Length:** 8 mm

Caution: Incorrect mounting angle or height may cause excessive light spots or reflection, affecting reading accuracy.

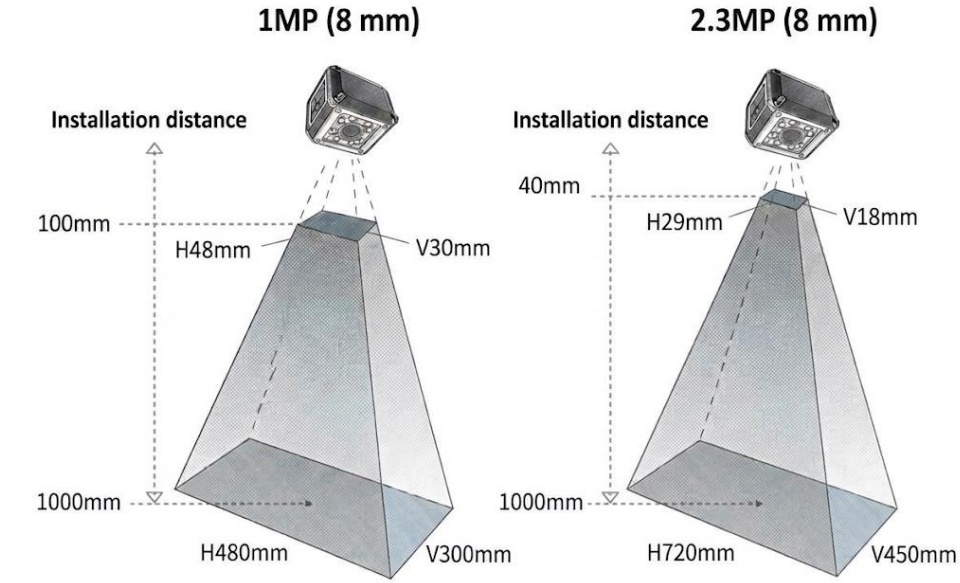

Power Connection

- Operating voltage: 24V DC, max 3A
- Connection options: Direct 24V DC or 110V~220V AC via adapter

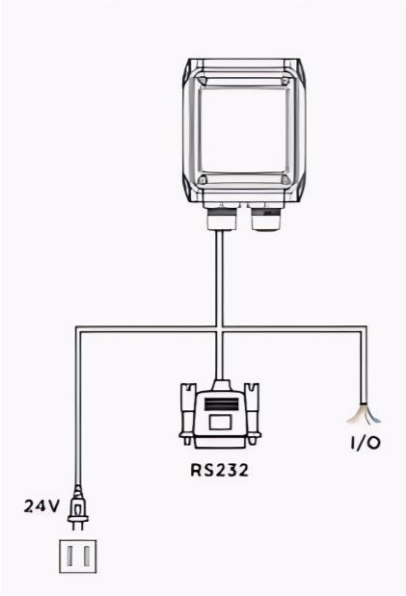

Direct External Supply: 24 VDC

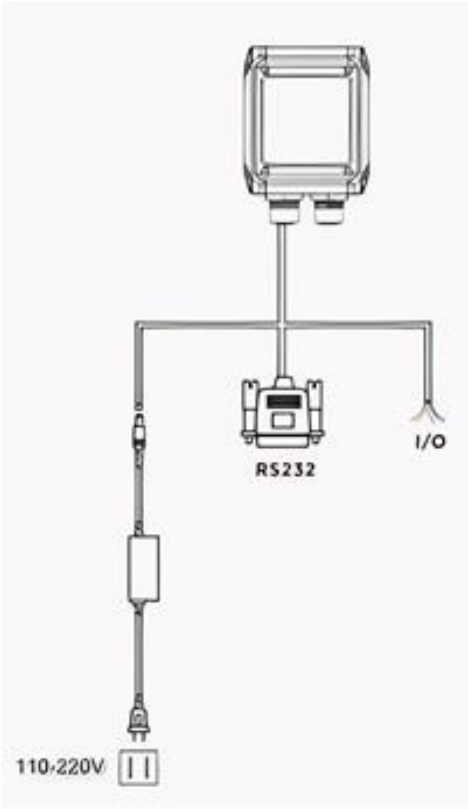

Direct External AC Supply: 110~220 VAC (using power adapter to convert to 24 VDC)

Communication Connection

RS-232 Serial Port

- Default: 9600 baud, 8 data bits, no parity, 1 stop bit
- Settings can be adjusted during software configuration

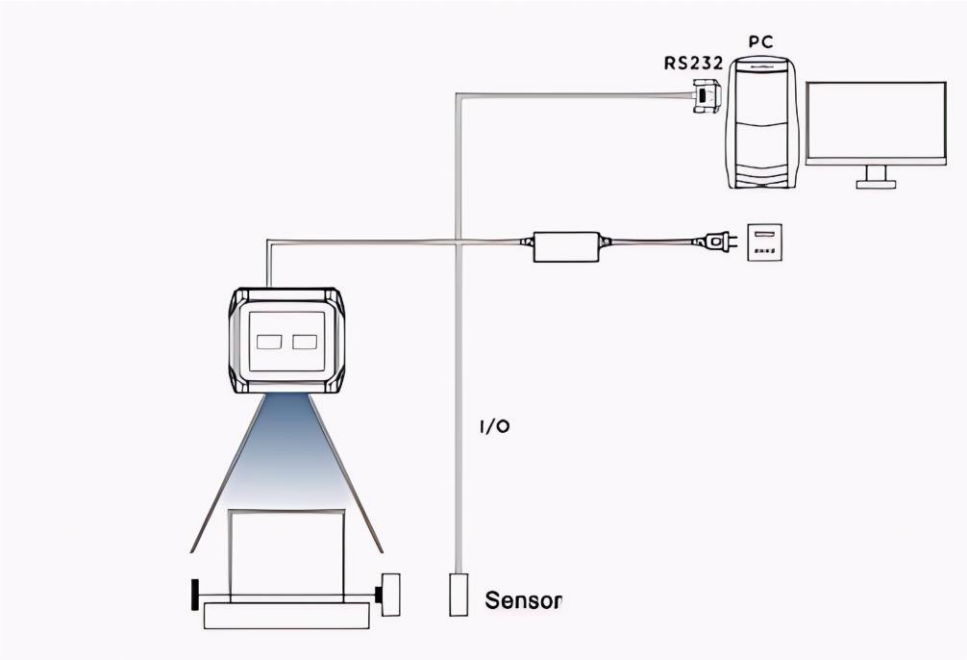

Ethernet Connection

- Default IP: 192.168.0.100
- Default port: 15000
- Settings can be adjusted during software configuration

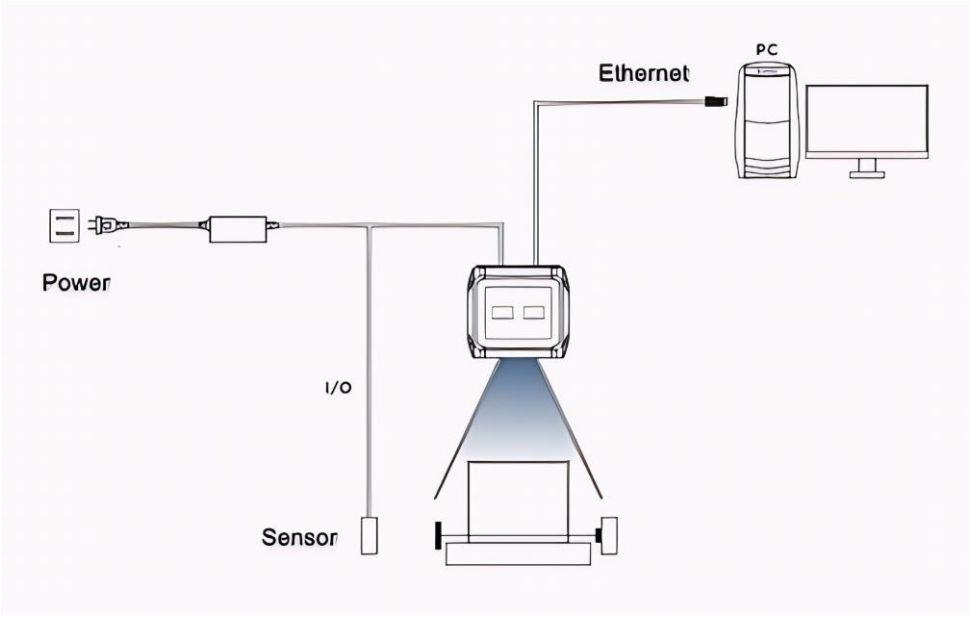

I/O Wiring Guide

Overview

- **2 optocoupler-isolated inputs**
- **3 non-isolated outputs**

Input Electrical Characteristics

Parameter	Symbol	Value
Input logic low voltage	VOL	6V
Input logic high voltage	VOH	12V
Input falling edge delay	TDF	1.3 μs
Input rising edge delay	TDR	35 μs

Note: Logic low/high = voltage threshold. Rise/fall delays indicate performance.

Output Electrical Characteristics

Parameter	Symbol	Value
Output logic low voltage	VOL	0.7V (max)
Output logic high voltage	VOH	Determined by the pull-up resistor
Output falling edge delay	TDF	7.5 μs
Output rising edge delay	TDR	141μs
Output fall time	TF	12.6 μs
Output rise time	TR	157.8 μs

Internal Wiring

Input Circuit

- LineIn0 / LineIn1: optocoupler-isolated
- Voltage range: 0–24V DC

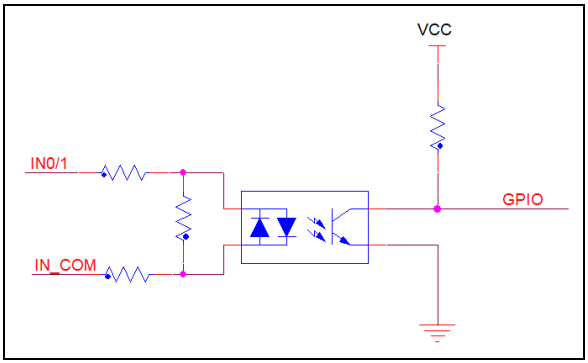

Device Input Circuit Diagram

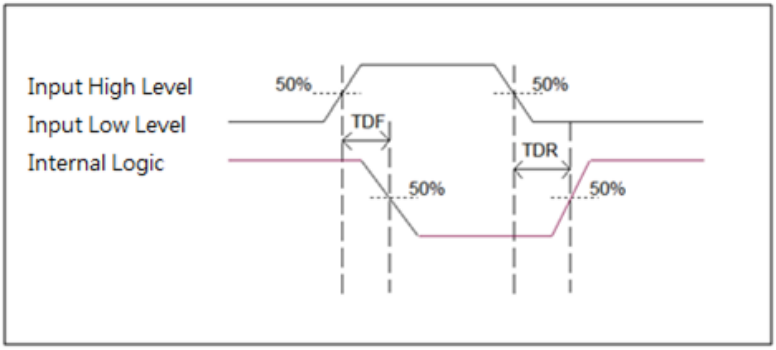

Input Logic Level Diagram

Output Circuit

- Lineout0/1/2 are opto-isolated outputs, supporting up to 28 V VCC and 30 mA output current. Inductive loads are not supported.

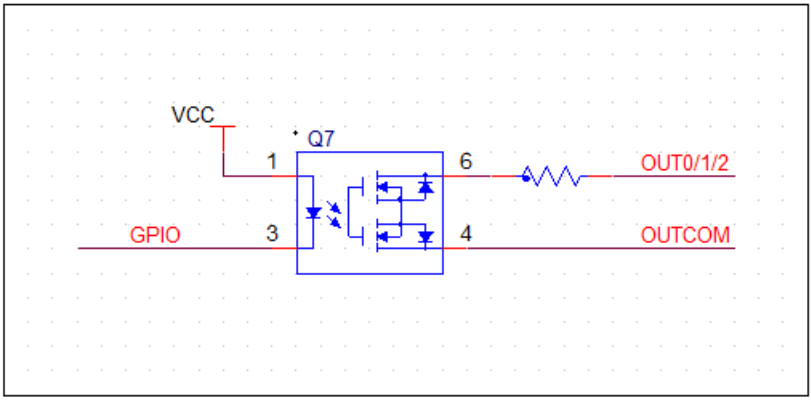

Device Output Circuit Diagram

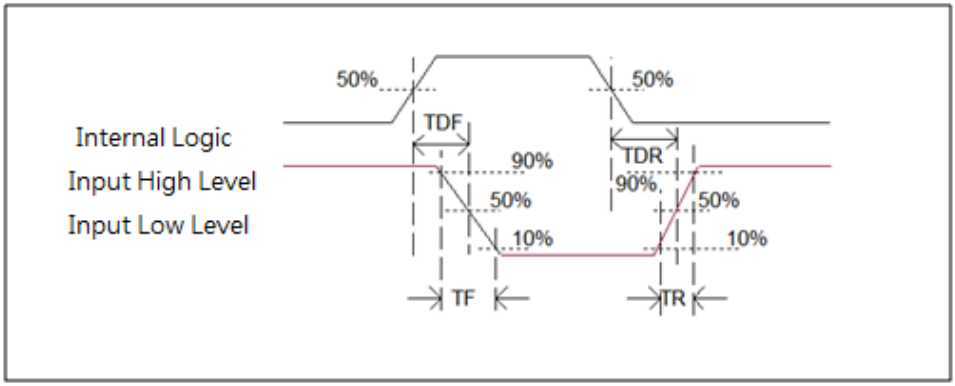

Output Logic Level Diagram

External I/O Wiring

Input Wiring

- Depends on external device type
- Examples: NPN or PNP input

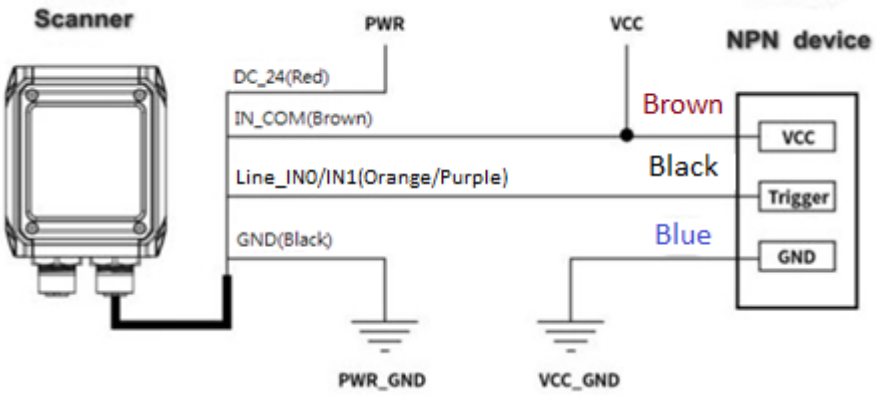

NPN as input

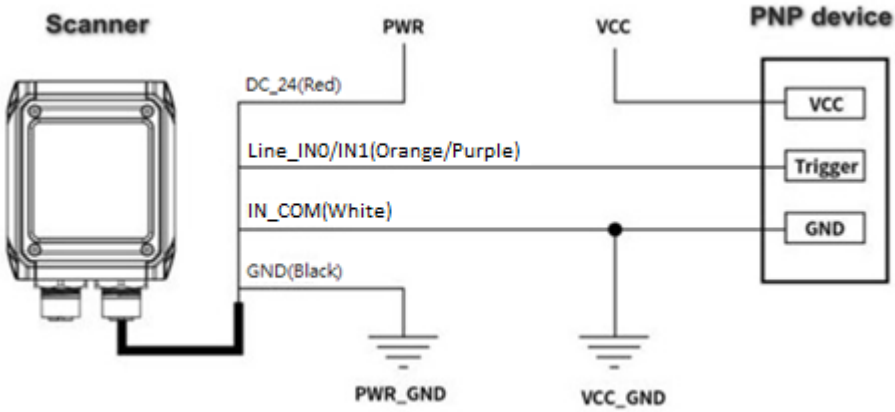

PNP as input

Output Wiring

- Depends on external device type
- Example: NPN device

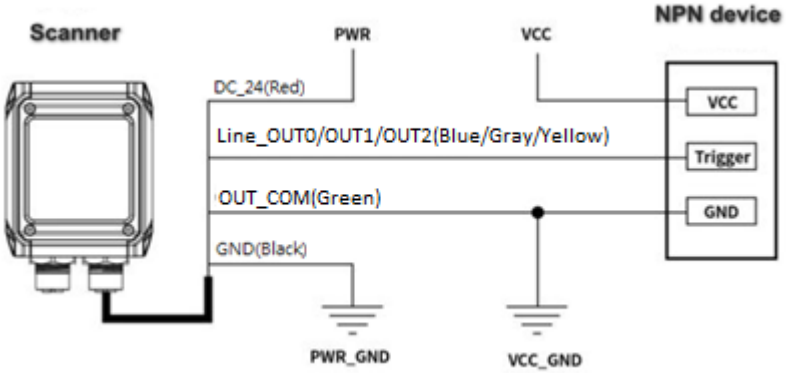

NPN as external device

Guidelines:

- **Scenario 1**: **Controlling Power Circuits**
  To control devices like optocouplers, alarms, or indicator lights directly, connect the positive terminal of the load to the external power supply's VCC and the negative terminal to the LINE_OUTx pin. Connect the OUT_COM pin to the power supply's ground (GND). Note: The load current must be less than 100mA. A current-limiting resistor may be necessary depending on the load and supply voltage.

- **Scenario 2**: **Providing High/Low Level Signals**
  If the controlled device's TRIGGER pin has no internal pull-up/pull-down resistor: An external pull-up resistor (1K-10K Ω

recommended) is required. Connect this resistor between the LINE_OUTx pin and the external VCC. The OUT_COM pin should be connected to GND. The voltage at the TRIGGER pin will be high when the output is off and low when the output is on.

- If the controlled device's TRIGGER pin has an internal pull-up/pull-down resistor:
    - To provide a **PNP (high level) signal**, connect OUT_COM to the external VCC.
    - To provide an **NPN (low level) signal**, connect OUT_COM to the external GND.
- **For complex scenarios requiring both PNP and NPN signals from different outputs**: To control multiple devices requiring different signal types, a relay can be used. For example, to provide an NPN signal from Line_OUT0 and a PNP signal from Line_OUT1, connect OUT_COM to the ground of the NPN device. Then, use Line_OUT1 to drive a relay, with the relay's common contact connected to the VCC of the PNP device.

RS-232 Serial Port

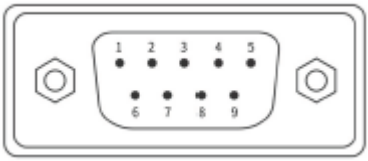

- Supports 9-pin male RS-232 connector for external communication
- VCC must not exceed PWR voltage to prevent abnormal output

Pin	Function	Description
2	RX	Receive data
3	TX	Transmit data
5	GND	Signal Ground

Client Operation

Software Connection

- Double-click the software icon to launch the client.
- Ensure that the ZX-3020 intelligent barcode reader and the PC running the configuration software are within the same network segment.
- Default IP address: **169.254.153.0**; Subnet Mask: **255.255.0.0**
- You can connect using either **DHCP** or a **static IP address**.



PC Network Configuration

Changing the PC IP Address

Configuration Procedure (Windows 10 Example):

1. Navigate to: **Start Menu > Settings > Network & Internet > Ethernet > Adapter Options**.

2. Right-click **Ethernet 3 > Properties > Internet Protocol Version 4 (TCP/IPv4)**.

3. Modify the IP address of the corresponding network card to:

    - **IP Address:** 169.254.153.16

    - **Subnet Mask:** 255.255.0.0

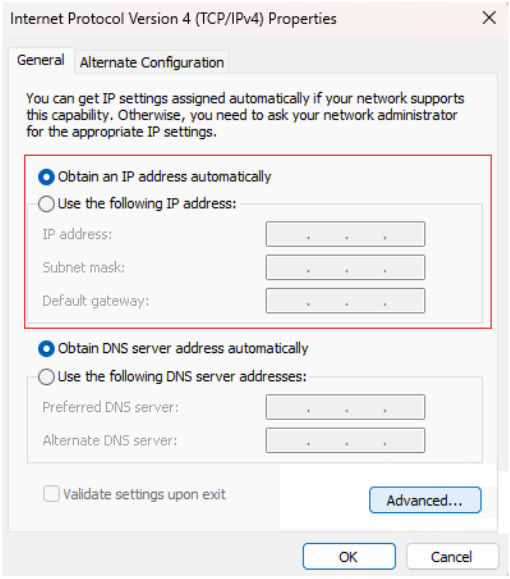

Configuration Procedure (Windows 11 Example):

1. Press **Windows Key + X** and select **Network Connections**.
2. Edit the **IPv4 settings** of the corresponding network adapter.
    - **Default Scanner IP Address:** 169.254.153.0
    - **Subnet Mask:** 255.255.0.0
3. Manually configure the PC IPv4 settings as follows:
    - **PC IP Address:** 169.254.153.2
    - **Subnet Mask:** 255.255.0.0

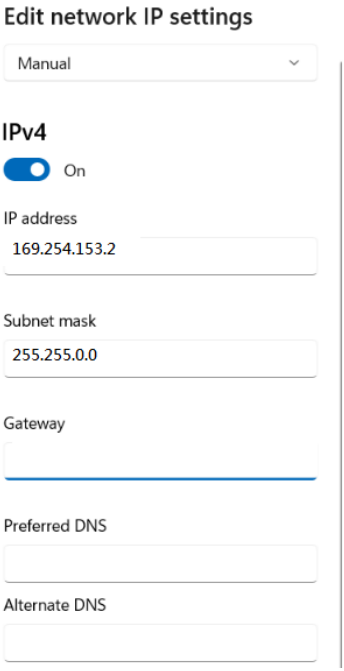

Changing the Barcode Reader IP Address

1. Open the configuration software and select the corresponding PC network card.
2. When the barcode reader is displayed, click **IP Settings > Use Static**.
3. Choose either **Dynamic IP** or **One-click Match**, then confirm.
4. Adjust the barcode reader IP address to match the same network segment as the PC.

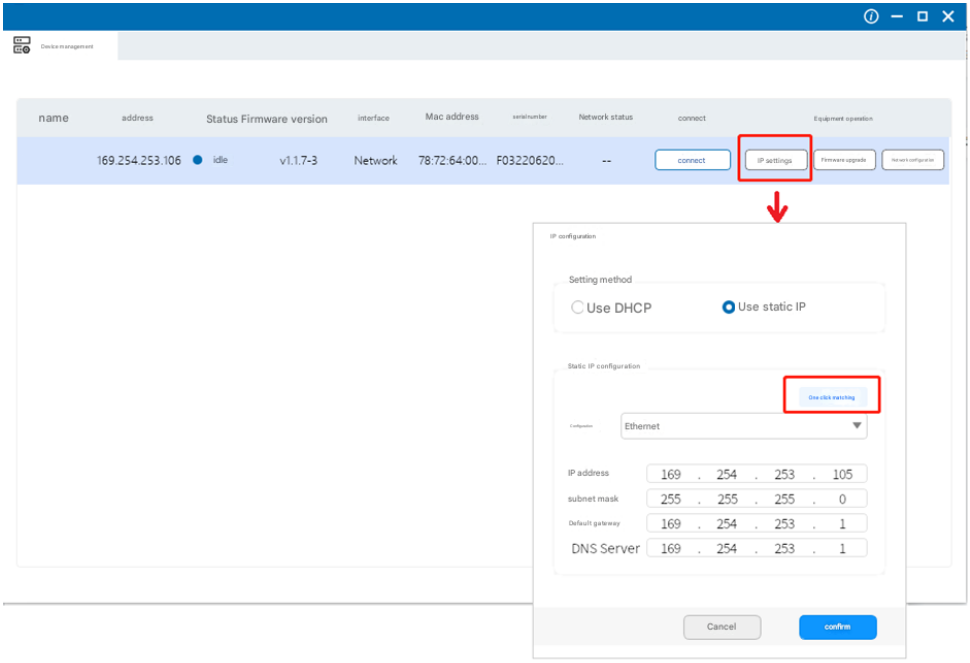

Firmware Upgrade

1. Navigate to: **Device Management > Device Operation > Firmware Upgrade**.
2. Select the firmware file and click **OK**.
3. Wait for the device to reboot automatically.

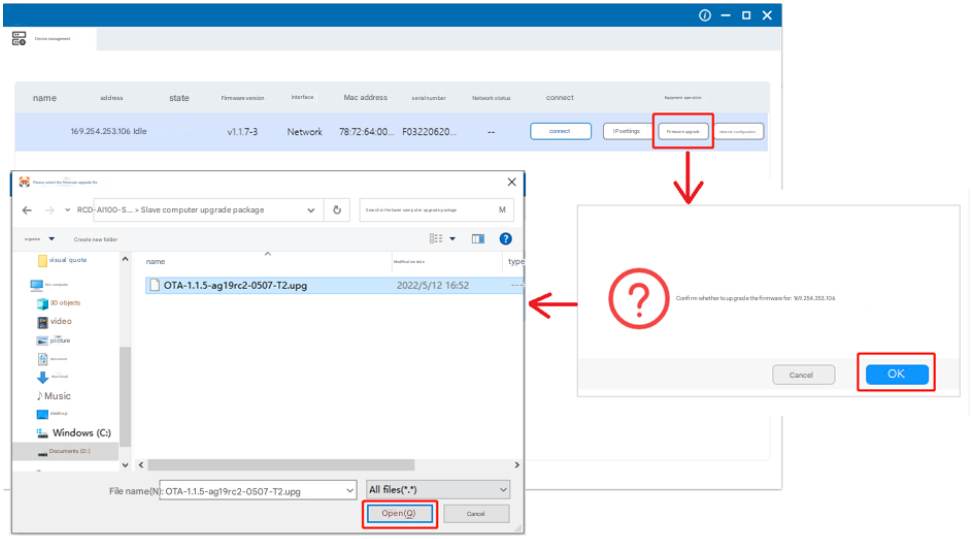

Function Overview

Interface Overview

The ZX-3020 can be operated through the client interface.

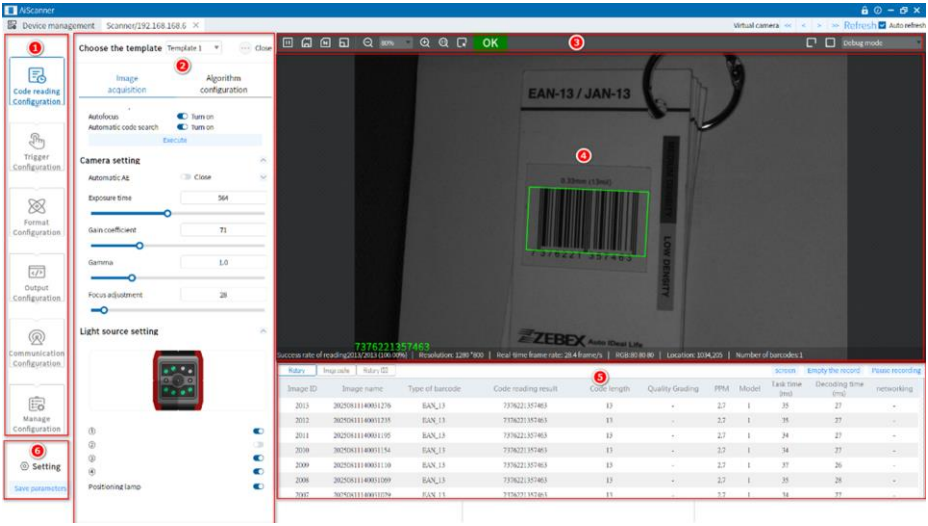

1. **Menu Bar**: Access basic client functions. Second-level menus allow parameter settings, template selection, and module configuration.
2. **Barcode Reader Configuration**: Adjust algorithm parameters, start/stop image collection, save/cancel ROI, etc.
3. **Toolbar**: Quick functions such as zoom, software trigger, and image operations.
4. **Preview Window**: Displays the live image, real-time decoding results, and ROI drawing effects.
5. **History Records**: Shows real-time barcode reading results.
6. **Basic Settings**: Change device name, buzzer settings, button settings, log access, and firmware upgrade.

Code Reading Configuration

Template Selection

- Up to **16 templates** are supported (Template 1–16).
- Select from the drop-down menu in **Reader Configuration > Template Selection**.
- **Template Polling**: Cycles through selected templates per trigger; Use last successful template starts with the previous success.
- **Multi-template Serial Acquisition**: Enabled = serial acquire/decode; disabled (default) = parallel acquire, sequential decode.
- Once configured, the template can be saved and reused.

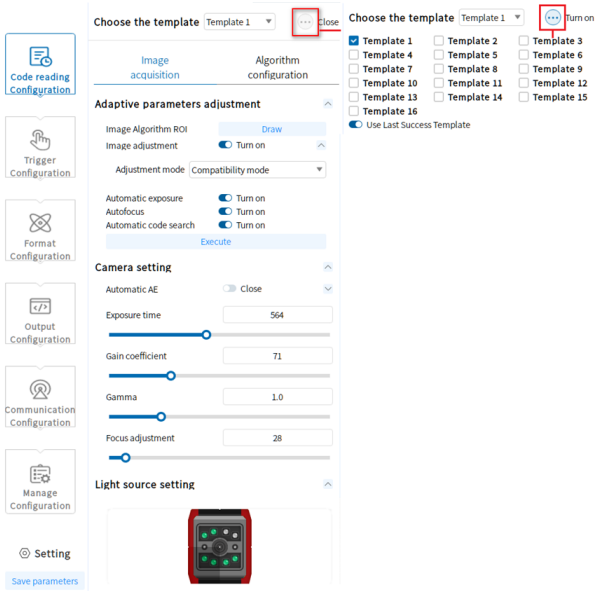

Image Acquisition

- Adjust **Image Acquisition** parameters if recognition performance is poor: exposure time, gain, focus, light source settings.
- ZX-3020 supports both manual and adaptive automatic adjustment.

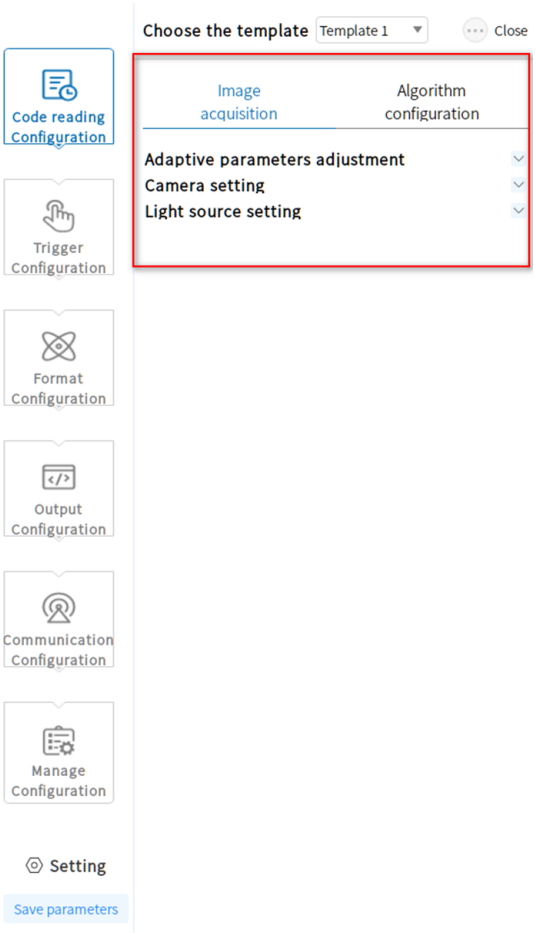

Adaptive Parameter Adjustment

This feature allows the device to automatically adjust key parameters to achieve optimal decoding results

- **Image Algorithm ROI**: Defines the area for auto-adjustment.
- **Adjustment Mode**: Compatible (balanced), High Quality (low noise), Motion (reduced blur).
- **Auto Code Search (Optional):** Automatically detects barcode type.
- **Light Source Adaptive (Optional)**: Includes lighting in auto-adjustment.

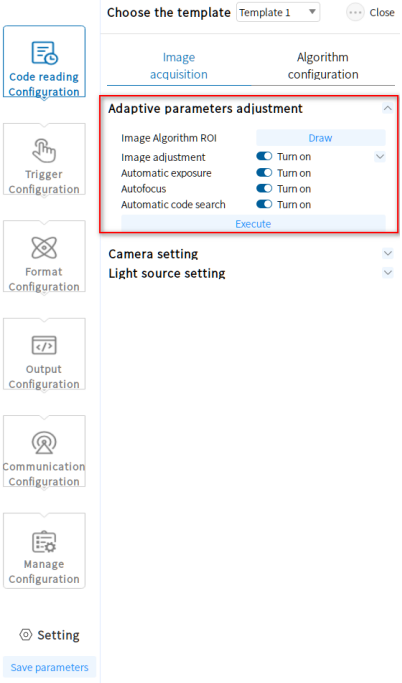

Camera Settings

- **Auto AE**: Automatically captures multiple exposures to determine optimal brightness.
- **Exposure Time**: Controls sensor exposure duration; longer exposure increases brightness and motion blur.
- **Gain Coefficient**: Amplifies sensor signal; higher values increase brightness and noise.
- **Gamma Value**: Adjusts image contrast (range 1–4).
- **Focus Adjustment**: Adjusts electronic zoom to achieve sharp focus.

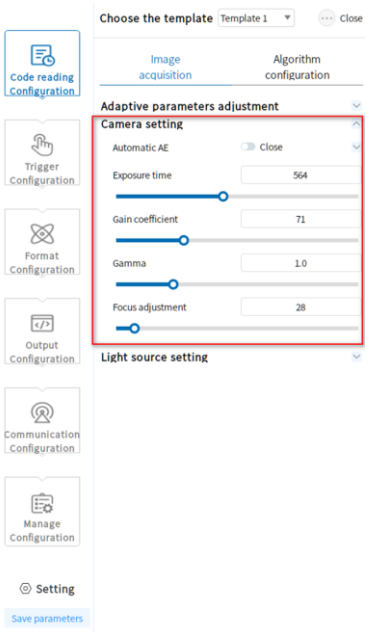

Tip: Higher exposure reduces supported motion speed; higher gain increases image noise.

Light Source Settings

- **Light Source**: Toggles the main illumination source on or off.
- **Fill Light Duration**: Sets the duration the light remains on during an exposure (in microseconds, default: 2000 µs).
- **Positioning Light**: Toggles the aiming light on or off.

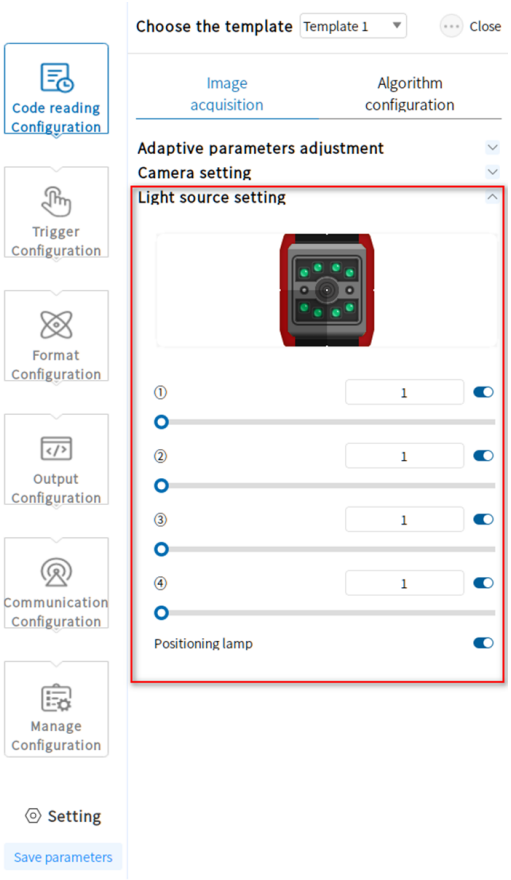

Algorithm Configuration

Code Reading Type

- Supports **1D** and **2D** barcode types. Multiple selections allowed.
- The more code systems selected, the longer decoding time; select only as needed.

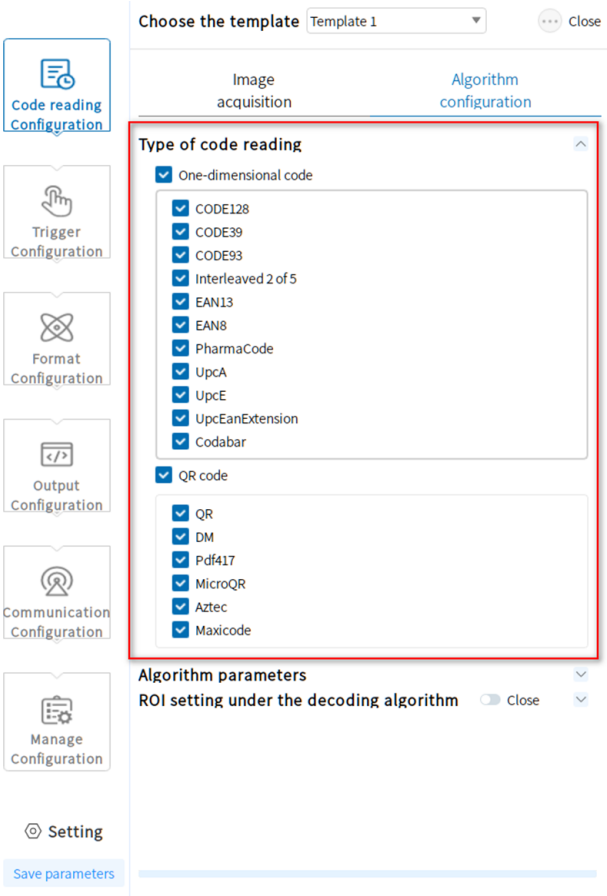

Algorithm Parameters

The following Algorithm Parameters allow fine-tuning of the barcode decoding process to optimize performance, accuracy, and compatibility with various barcode types and conditions. Each setting controls a specific aspect of the decoding algorithm, from image preprocessing and barcode format handling to output standards and scanning speed, enabling the device to adapt to both standard and complex scanning scenarios.

- **Algorithm Timeout:** Maximum time allowed to decode a single image.
- **Image Preprocessing:** Applies image enhancement (erosion, dilation, open, close).
- **Algorithm Type:** Normal for standard use; Expert for complex conditions.
- **GS1:** Enables GS1-formatted output.
- **ISO Code Grading Standard:** Selects ISO1541X or ISO29158 for quality grading.
- **Polarity:** Light on dark, Dark on light, or auto-detect.
- **Edge Type:** Continuous, Discrete, or auto.
- **Mirror Mode:** Mirror, Non-mirror, or auto.
- **Distortion:** Distorted, Non-distorted, or auto.
- **DM Code Type:** Square, Rectangle, or auto.

- **Run Mode:** High Speed, Normal, or Expert decoding.
- **QR Version:** Optional version lock to reduce processing time.
- **DM Version:** Optional version lock to reduce processing time.
- **QR Mode:** Mode 1, Mode 2, or auto.
- **Number of 1D codes:** Maximum 1D barcodes per image.
- **Number of 2D codes:** Maximum 2D barcodes per image.

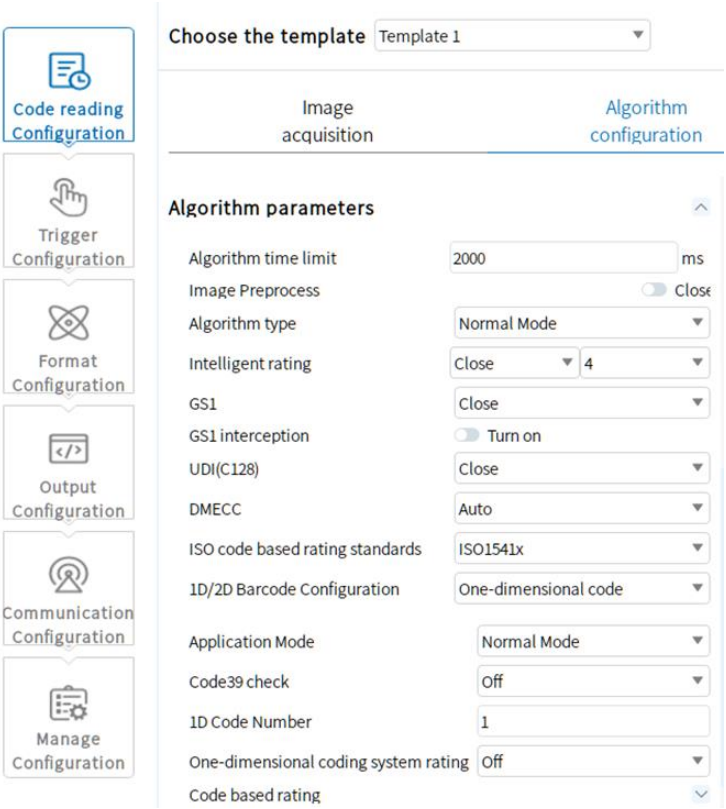

ROI (Region of Interest) Settings

Defining an Algorithm ROI restricts the decoding process to a specific area of the image, which can significantly improve speed and prevent accidental reads of incorrect barcodes.

- **Manual Drawing**: Manually draw and resize an ROI in the preview window. Its position and size can be fine-tuned using the Center X/Y, Width, and Height parameters.
- **Batch Add (Checkerboard)**: Automatically generate a grid of ROIs for applications with multiple, regularly spaced barcodes. Configure the overall Drawing Area, the Spacing between ROIs, and the ROI Quantity (Rows x Columns).

Additional functions include "Clear All ROIs" and "ROI Number Offset" to customize the starting number for the generated ROIs.

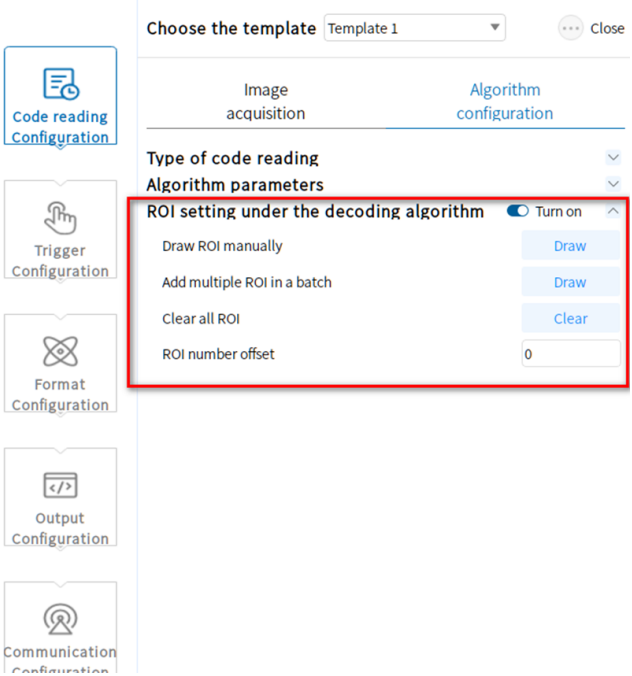

Manual ROI

Click **Settings** to enter **Manual ROI Mode**, where you can adjust the ROI size by dragging according to your requirements.
The selected area defines the **Region of Interest (ROI)** for the algorithm.

- **Center X:** X-coordinate of the ROI center
- **Center Y:** Y-coordinate of the ROI center
- **Width:** Number of pixels in the horizontal direction of the ROI
- **Height:** Number of pixels in the vertical direction of the ROI

Tip: Use precise X/Y coordinates and width/height values to fine-tune the ROI for optimal detection performance.

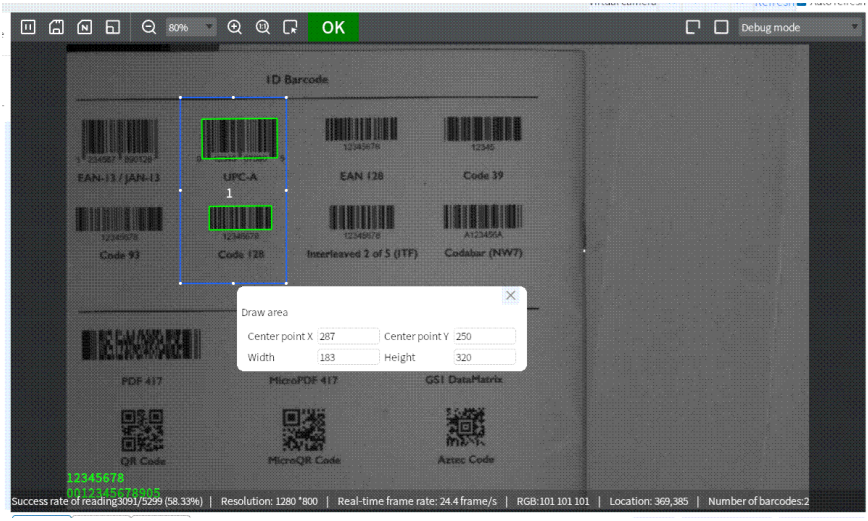

Batch ROI (Checkerboard)

Used for creating multiple ROIs at once.

1. **Draw Area:**
    - **Center X:** X-coordinate of the batch area center
    - **Center Y:** Y-coordinate of the batch area center
    - **Width:** Number of pixels horizontally (default is maximum)
    - **Height:** Number of pixels vertically
2. **Spacing Settings:**
    - **Row Spacing:** Distance between ROI rows
    - **Column Spacing:** Distance between ROI columns
3. **ROI Count (Rows × Columns):**
    - Specify the number of ROI rows and columns for batch creation
    - Maximum count is dynamically adjusted based on the drawing area size and row/column spacing
4. **Generate:**
    - Confirm and apply the above settings to create the batch ROIs

Tip: Adjust spacing and ROI count carefully to ensure no overlap and optimal detection performance.

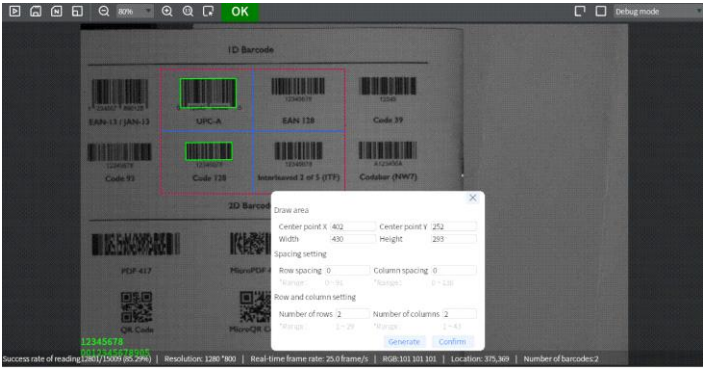

Clear All ROIs

- Clears all ROI settings.

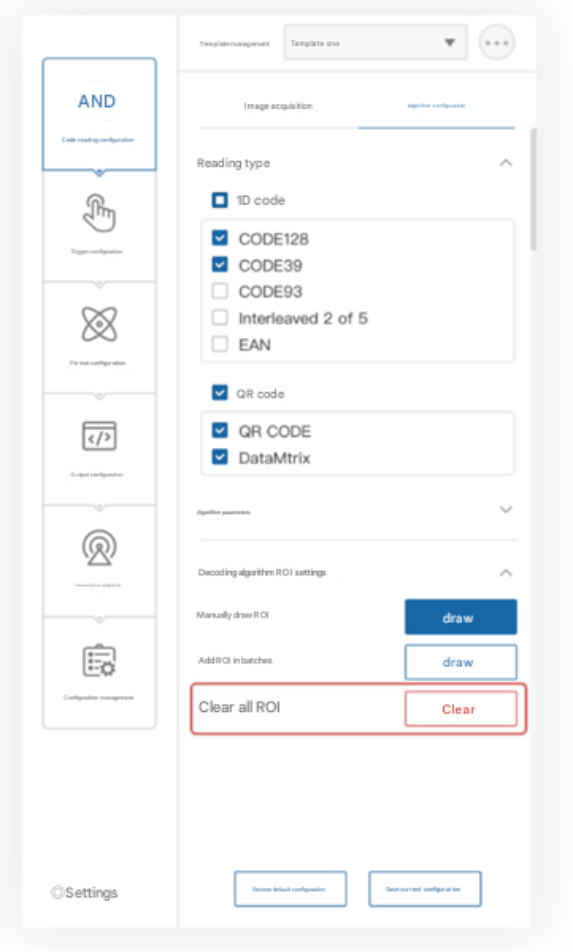

Trigger Configuration

Trigger Types

The device supports the following trigger modes: **Continuous Trigger**, **I/O Trigger**, **Software Trigger**, **Network Trigger**, **Serial Trigger** and **Sensor Trigger**.

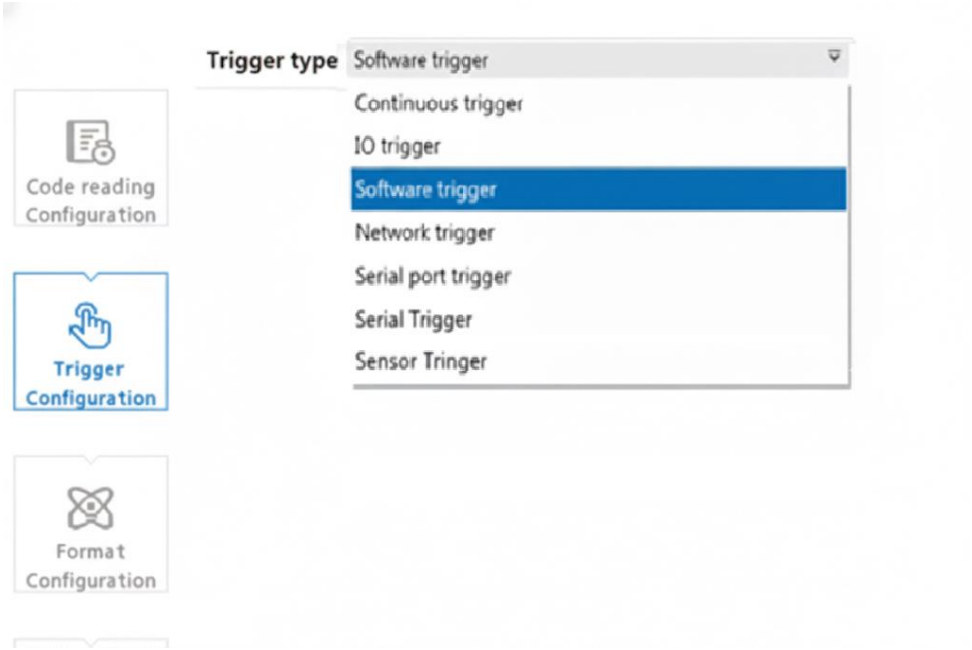

Continuous Trigger

Continuous trigger means the reader continuously captures and decodes images.

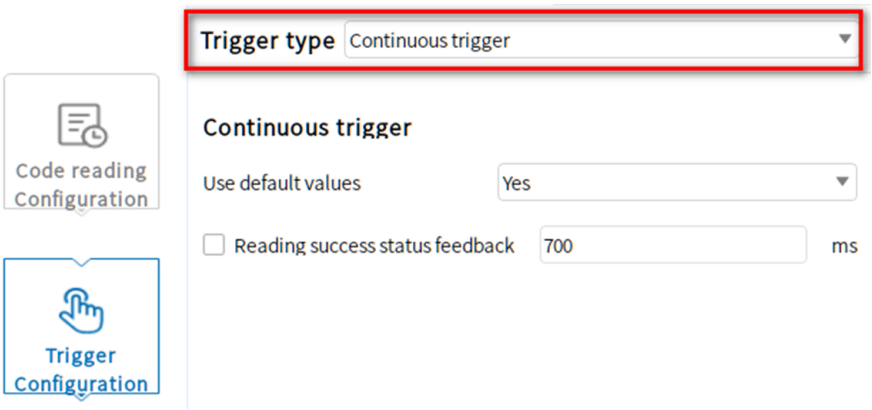

I/O Trigger

This mode uses an external electrical signal connected to the device's digital inputs (LineIn 0 or LineIn 1) to initiate a trigger task.

- **Task Timeout:** Defines the maximum allowable duration for a single trigger task. If the task is not completed within this time, it will automatically terminate to prevent the system from stalling or waiting indefinitely.
- **Multi-code End Enable:** When enabled, the trigger task can be set to terminate automatically after a specified number of **unique barcodes** have been successfully read. This feature is useful for batch scanning or conveyor-based applications where multiple codes need to be collected efficiently.
- **Acquisition Mode:** Determines how images are captured and processed during a trigger task:
    - **Non-cache mode (serial):** Images are captured and decoded one at a time in sequence. This mode is simple and reliable for lower-speed applications or when minimal buffering is desired.
    - **Cache mode (parallel):** The device captures a rapid burst of images into an internal buffer and then decodes them. This allows the system to handle **high-speed barcode scanning** efficiently without missing any targets. Cache-specific settings include **Max Image Count**, which limits the number of images stored in a burst, and **Acquisition**

Frequency, which determines how fast images are captured.

- **IO Debounce Time:** Implements a filtering mechanism to ignore brief or spurious electrical signals, preventing false triggers caused by electrical noise or contact bounce on the input lines.
- **Start & End Trigger Configuration**: Configure the specific signal conditions to start and stop a trigger task, including Trigger Delay, Trigger Signal (Line0/Line1), and Trigger Type (Rising Edge/Falling Edge).

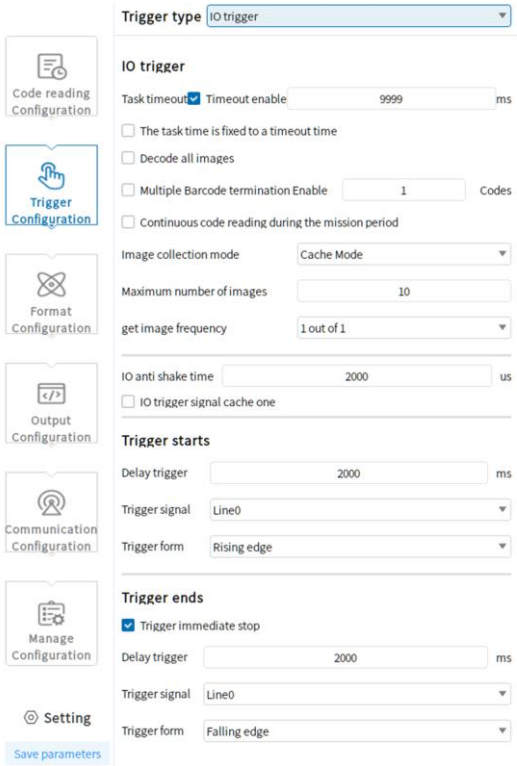

Software Trigger

By clicking **Software Trigger** in the interface, the reader can be activated for image capture and decoding.

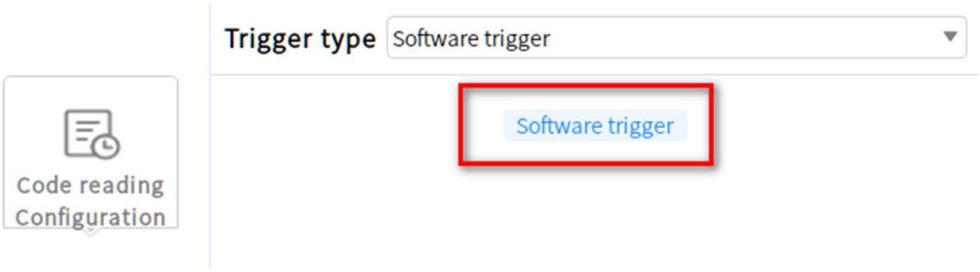

Network Trigger

This mode allows the reader to be triggered remotely via a **specific TCP command string** sent over the network. When the device receives the configured command, it initiates a trigger task, allowing precise network-based control for applications such as automated scanning stations, industrial systems, or remote monitoring setups.

- **Start & End Trigger Signal:** Users can define the exact command strings that will **start** and **stop** a trigger task. This ensures that only the intended commands initiate actions, preventing accidental triggers from other network traffic.
- **Result Trigger Enable:** When this feature is enabled, the reader will **hold the decoded results** in memory and only transmit them after receiving a specific **result trigger command**. This is particularly useful in systems where data must be synchronized with other processes or where network traffic must be carefully controlled.
- **Hexadecimal Mode:** Allows trigger commands to be sent in **hexadecimal format** instead of plain text. This is beneficial for systems that require binary-level communication or integration with devices that transmit data in hex.
- **Ignore CR/LF:** The reader can be configured to **ignore carriage return (CR) and line feed (LF) characters** at the beginning or end of the trigger command. This ensures that minor formatting differences or extra characters in the command string do not prevent the trigger from being recognized.

- **Command Suffix Substring:** Enables **partial matching**, where a trigger will succeed if the received command **contains** the specified trigger string, rather than requiring an exact full match. This provides flexibility when dealing with variable command formats or additional data appended to the command.

- **Other Parameters:** Settings such as **Task Timeout** and other operational limits are consistent with the IO Trigger mode, ensuring uniform behavior across different trigger methods and allowing users to apply familiar timeout and task control rules.

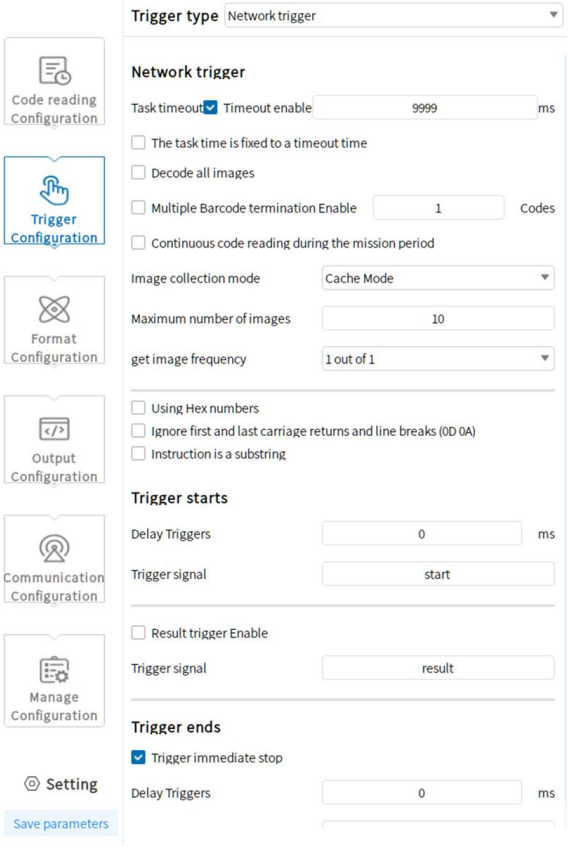

Task Timeout

- **Definition:** Sets the maximum duration for a single trigger task. If the trigger remains active beyond this timeout, the task will be forcibly terminated.
- **Default Value:** 9999
- **Adjustable Range:** 10–9999

Notes / Operational Behavior:

1. **Fixed Task Duration:**
    - The task duration is equal to the timeout setting.
    - The device will only output results **after the task duration ends**.
2. **Decoding Behavior:**
    - **Decode All Images:** The scanner attempts to decode all captured images during the task.
    - **Multi-Code Mode:** If multiple codes are detected, it can be configured to output N codes at the end of the task.
    - **Continuous Reading During Task:**
        - **Buffer Mode Enabled:** Decoding stops once a code is detected.
        - **Non-Buffer Mode / Trigger Mode:** The scanner continuously decodes images during the task.
3. **Network Trigger Considerations:**
    - In **non-buffer mode without a timeout**, if a barcode is presented, the scanner will continuously attempt decoding, and the indicator light may blink, **but results will not be output until the task ends**.
    - Behavior is similar for **serial output**.
    - In contrast, **I/O Trigger mode** with the same settings will output results normally.

Image Capture Settings

1. **Capture Mode:**
    - Can be set to **Buffer (Temporary Storage) Mode** or **Non-Buffer Mode**.
        - **Buffer Mode:** Captures images and stops decoding once a code is detected.
        - **Non-Buffer Mode:** Continuously decodes images during the trigger task.
2. **Maximum Image Count:**
    - Set the maximum number of images to capture per task.
    - **Range:** 1–200
3. **Capture Frequency:**
    - Determines how often images are taken (e.g., capture 1 image every N frames).
    - Input uses **hexadecimal format**.
4. **Ignore Leading/Trailing Carriage Return/Line Feed:**
    - When enabled, ignores **0D/0A** characters at the start or end of captured data.
5. **Command as Substring:**
    - You can configure a **specific substring** within the captured data to act as a command trigger.

- **Usage Example:**
  - If your barcode data contains a known substring (e.g., "START"), configure this substring so that only codes containing it are processed or trigger actions.

6. **Trigger Settings:**

   Start Trigger Delay:

   - Time delay (0–9999 ms) after receiving the start signal before beginning image capture.
   - **Trigger Signal:** Start

   Stop Trigger / End Trigger:

   - Immediately stops capturing when a stop signal is received.
   - Typically used in **Non-Buffer Mode** to define task boundaries.
   - **Trigger Delay:** 0–9999 ms
   - **Trigger Signal:** Stop

Serial Port Trigger

1. **Trigger Type:** Serial Port
2. **Task Timeout:**
    - Sets the maximum duration for a single trigger task.
    - If the trigger remains active beyond this timeout, the task will be forcibly terminated.
    - **Default:** 9999
    - **Range:** 10–9999
3. **Multi-Code Mode:**
    - When enabled, multiple detected codes can be output.
    - Configurable to output **N codes** at the end of the task.
4. **Result Output:**
    - Task results are output at the end of the trigger task.
5. **Image Capture Mode:**
    - Can be set to **Buffer (Temporary Storage) Mode** or **Non-Buffer Mode**.
    - Uses **hexadecimal format** for capture frequency and commands.

Sensor Trigger

This mode enables the reader to trigger itself automatically when it detects a significant change in image brightness, such as an object entering the field of view.

- **Trigger Sensitivity:** Set to Low, Medium, or High to adjust how much brightness change is required to trigger.
- **Sensor Timeout:** If no barcode is read within this time after a sensor trigger, the task ends.
- **Sensor Interval:** The minimum time that must pass between two consecutive sensor trigger tasks.
- **Multi-code End Enable:** Ends the task after a set number of codes are successfully read.
- **Continuous Read:** If enabled, the reader will continue to output results as long as the barcode remains present in the field of view after the initial trigger.

Start Trigger Settings

- **Trigger Delay:** 0–9999 ms
- **Trigger Signal:** Start

Stop / End Trigger Settings

- **Immediate Stop:** Trigger stops capturing immediately when signal is received
- **Trigger Delay:** 0–9999 ms
- **Trigger Signal:** Stop

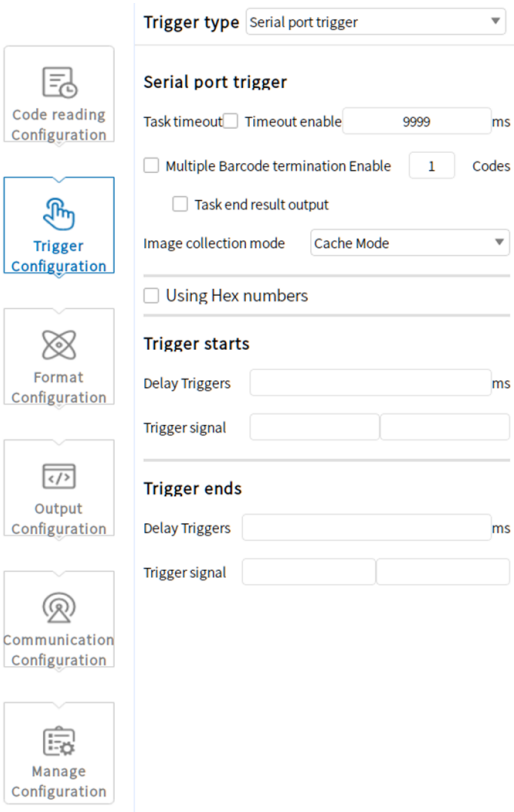

Format Configuration

The format configuration includes **Data Filtering** and **Data Processing**, allowing configuration of filtering rules and output data.

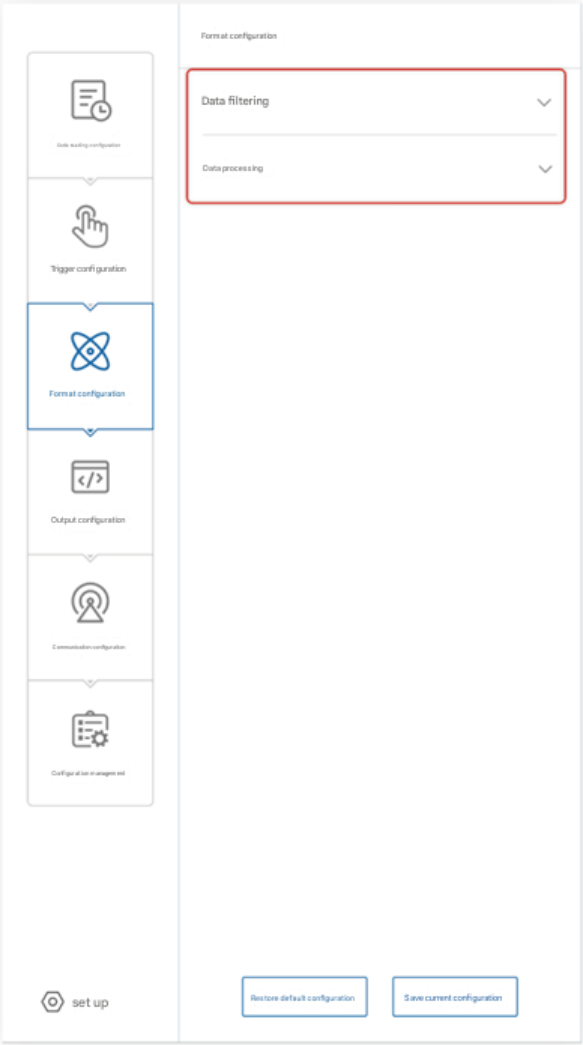

Data Filtering

Filters barcode results based on predefined rules.

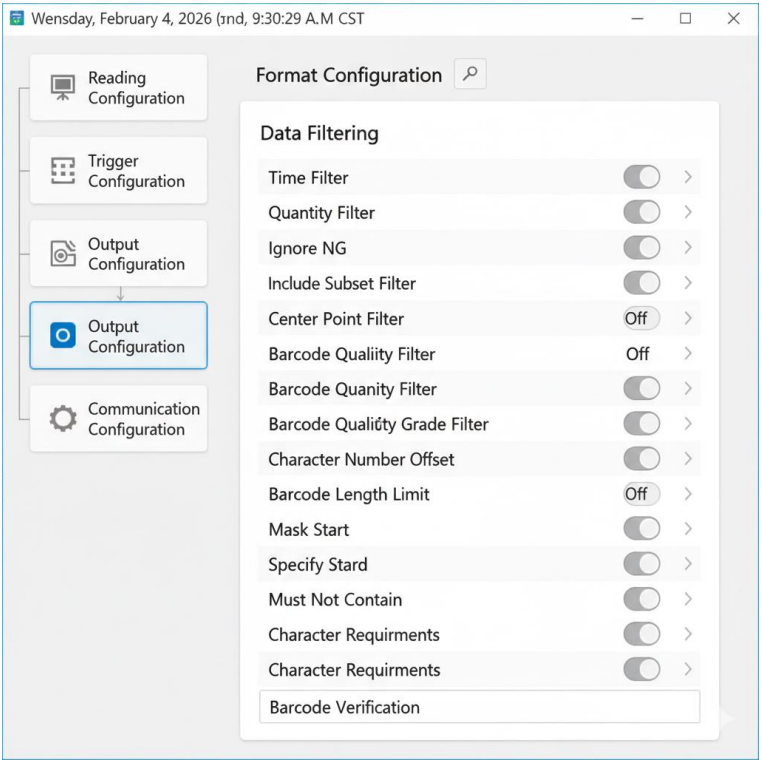

- **Duplicate Barcode Filter:** Suppresses output if the result matches the previous barcode.
- **Filter Ignore NG:** Ignores filtering rules for No-Read (NG) results.
- **Filter Includes Subset:** Treats results as identical if one barcode is a subset of another.

- **Center Point Filter:** Outputs only the barcode closest to the image center.
- **Angle Filter:** Outputs barcodes within a specified angle range.
- **Barcode Quantity Filter:** Outputs results only when the decoded barcode count matches the set value.
- **Barcode Grade Filter:** Outputs only barcodes meeting the minimum quality grade.
- **Character Position Offset:** Outputs data starting from a specified character position.
- **Barcode Length Limit:** Outputs barcodes within a defined length range.
- **Block by Prefix:** Blocks barcodes starting with a specified prefix.
- **Require Prefix:** Outputs only barcodes with a specified prefix.
- **Require Suffix:** Outputs only barcodes with a specified suffix.
- **Must Contain:** Outputs only barcodes containing a specified string.
- **Cannot Contain:** Blocks barcodes containing a specified string.
- **Output Character Requirement:** Limits output to digits, letters, or both.

Data Processing

Configures the output processing rules for decoded barcodes. Parameters vary depending on selected communication protocol.

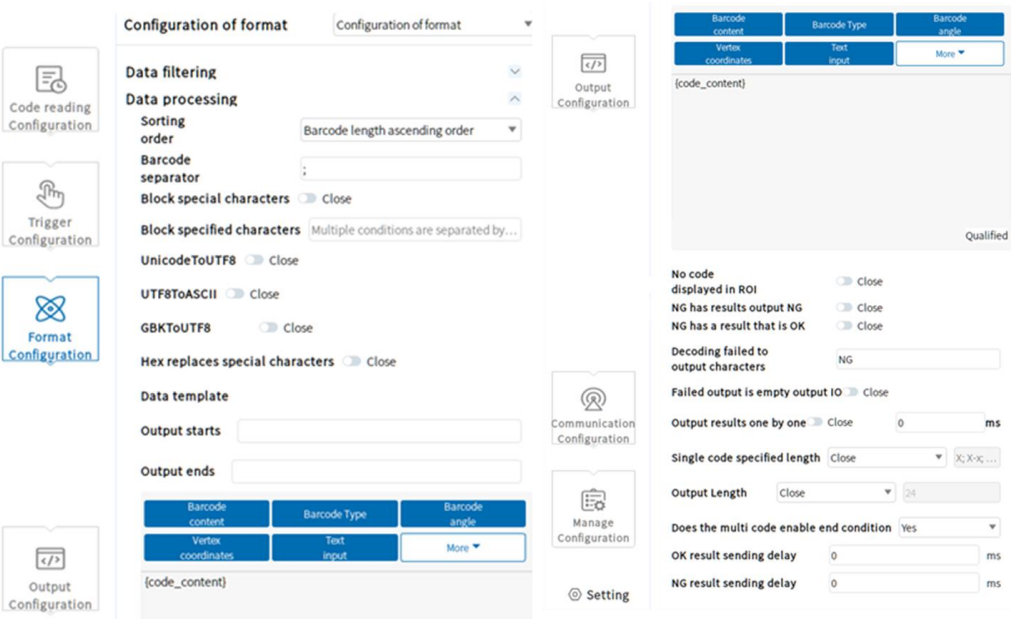

- **Sorting Method:** When reading multiple codes, you can sort the results based on one of nine methods:
    - Barcode Length (Ascending/Descending)
    - Barcode Type (Ascending/Descending)
    - ROI Number (Ascending/Descending)
    - Barcode Center X (Ascending/Descending)
    - Barcode Center Y (Ascending/Descending)

- Barcode Position (Ascending/Descending)

- **Barcode Separator:** A character or string used to separate the data from multiple barcodes in a single output. Custom and hexadecimal values (e.g., <0D> for carriage return) are supported.

- **Data Template:** A powerful tool to build a fully custom output string. You can combine static text with dynamic data elements, including:

  - Barcode Content, Barcode Type, Angle, Corner Coordinates, Timestamp, Barcode Quality Grade, ROI Number, PPM, Barcode Quantity, Barcode Length, Center Coordinates, Decoding Time, and more.

- **Other Options:**

  - **ROI No-Read Fill:** Fills in a placeholder character for ROIs where no code was read.

  - **NG with Result Output NG:** Outputs an NG signal if the total number of reads does not match the expected quantity, even if some codes were read successfully.

  - **Decoding Failure Output Character:** The specific string to output on a No-Read event (e.g., "ERROR").

  - **Output Specified Length:** Truncates the output string to a specific length from the start or end.

  - **Host Networking Data Processing:** Settings for filtering duplicate codes and adding device IDs in a multi-reader network.

Network Data Processing

Network data processing allows you to:

- Filter Duplicate Barcodes: Prevent the same barcode from being output multiple times.
- Add Device ID: Include the unique identifier of the scanning device in the output data.
- Add Network Separator: Insert a custom separator for networked devices to distinguish data from multiple sources.

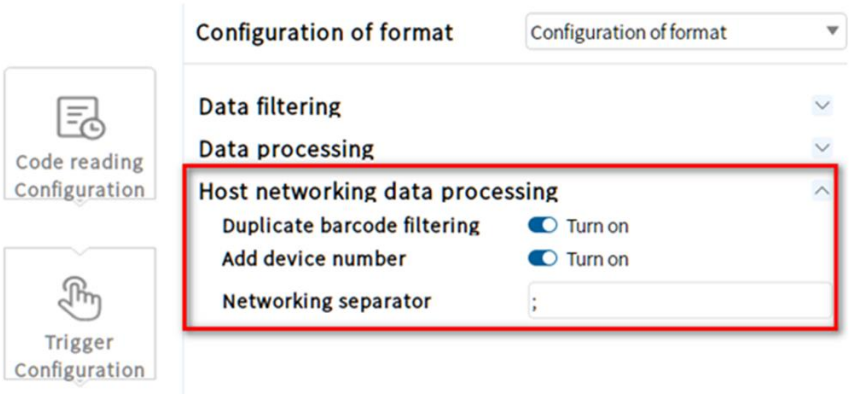

Output Configuration

This section defines the operating behavior of the device's **physical digital output signals**. The software parameters **OUTLINE0** and **OUTLINE1** map directly to the hardware output lines **OUT0** and **OUT1**, ensuring a one-to-one relationship between software configuration and physical output behavior.

These outputs can be used to signal decoding results, device status, or communication events to external equipment such as PLCs, controllers, or indicator devices.

- **Signal Output Source:** Specifies the condition that activates the output signal. Available sources include **OK** (successful barcode read), **Read Fail (NG)** when decoding fails, **Exception** to indicate a device or system error, and **Heartbeat Timeout** to signal loss of communication or system inactivity.

- **Output Duration:** Defines how long the output signal remains active once triggered. The duration is configurable from **1 to 10 ms**, with a default value of **10 ms**, allowing the output pulse width to be matched to external device requirements.

- **Output Invert:** Reverses the logical polarity of the output signal, allowing configuration for either **active-high** or **active-low** operation to ensure compatibility with different control systems.

- **Trigger Character:** Allows a **TCP or serial command** to manually activate a digital output. This enables software-controlled signaling for testing, synchronization, or remote control applications.

- **Trigger Character Timeout Reception:** When enabled, the output can be configured to indicate a **timeout condition** if an expected trigger command is not received within a specified time period, providing a mechanism to detect communication failures or abnormal system behavior.

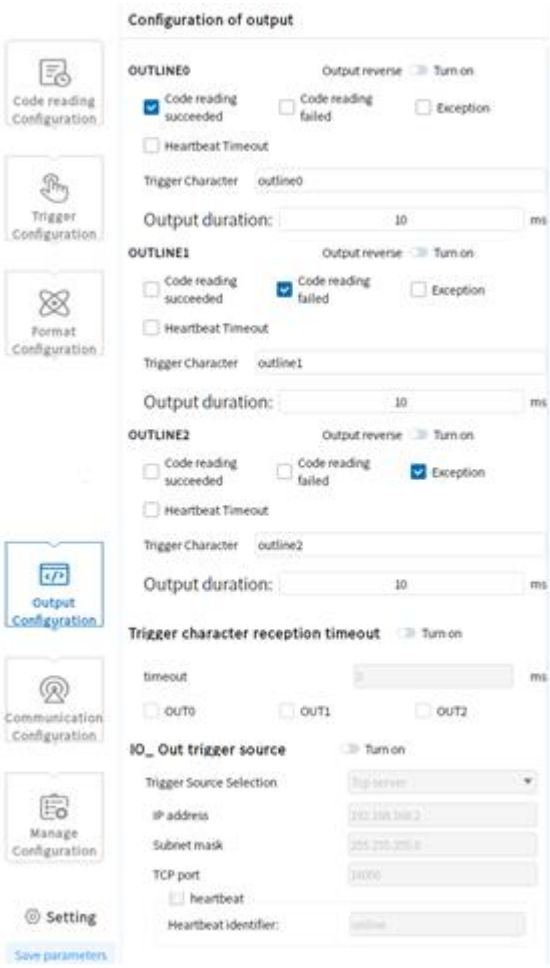

Communication Configuration

Supports **TCP** and **Serial** communication. Protocol selection depends on device operation mode.

TCP Server

Standard TCP communication where the scanner operates as a server.

- **TCP Port**: The port number the reader will listen on for incoming connections.
- **Heartbeat**: Settings to periodically check the connection status.

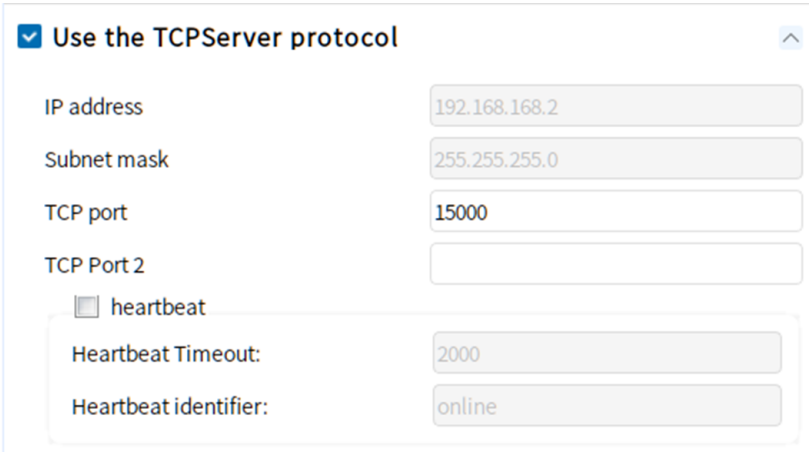

Modbus TCP

Requires configuration of:

- **Modbus Type:** Server or Client mode.
- **Server IP:** Modbus TCP server IP address (Client mode only).
- **Byte Swapping:** Swaps high and low bytes within a word.
- **Port:** Modbus TCP port number.
- **Device Station ID:** Reader station ID on the Modbus network.
- **Data Address:** Starting register address for result data.
- **Data Length:** Length of the data register block.
- **Trigger Address:** Register address used for triggering.
- **Trigger Length:** Length of the trigger register block.

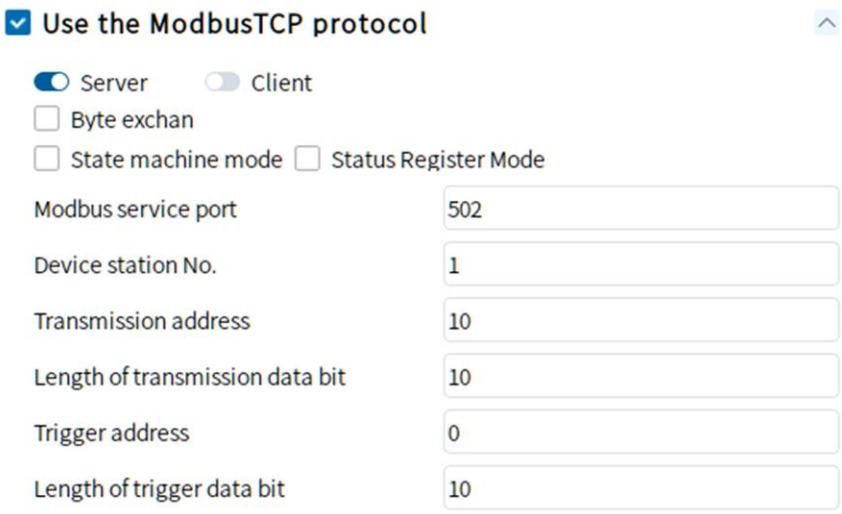

MC Protocol

Requires configuration of:

- **Server IP:** IP address of the PLC.
- **Port:** Port number for the MC Protocol connection.
- **Device Station ID:** Station ID of the reader.
- **Network Number:** PLC network number.
- **Data Address:** Starting PLC device address for result data.
- **Data Length:** Length of the data block.

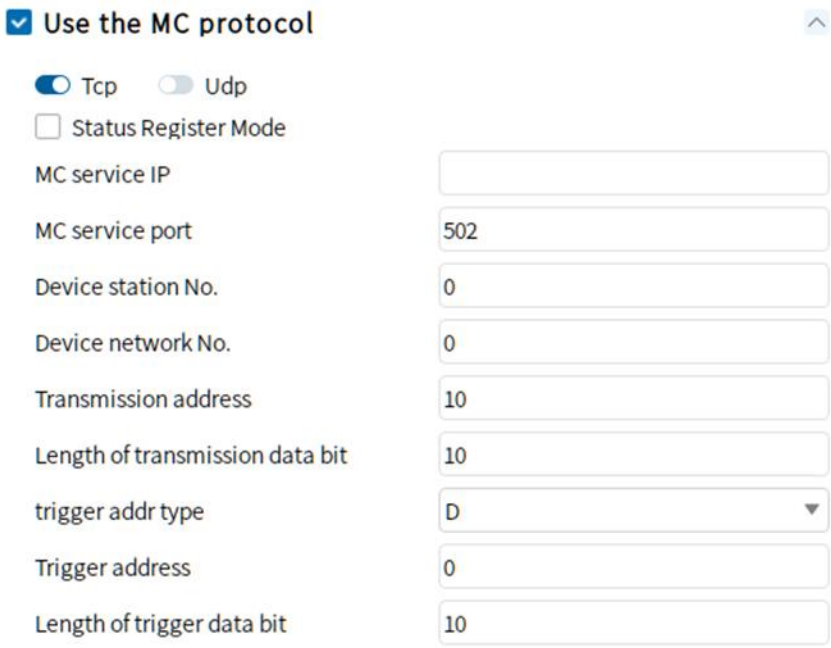

TCP Client

Requires configuration of:

- **Server IP**: IP address of the host server.
- **TCP Port**: Port number of the host server.
- **Heartbeat**: Settings for periodic connection status checks.

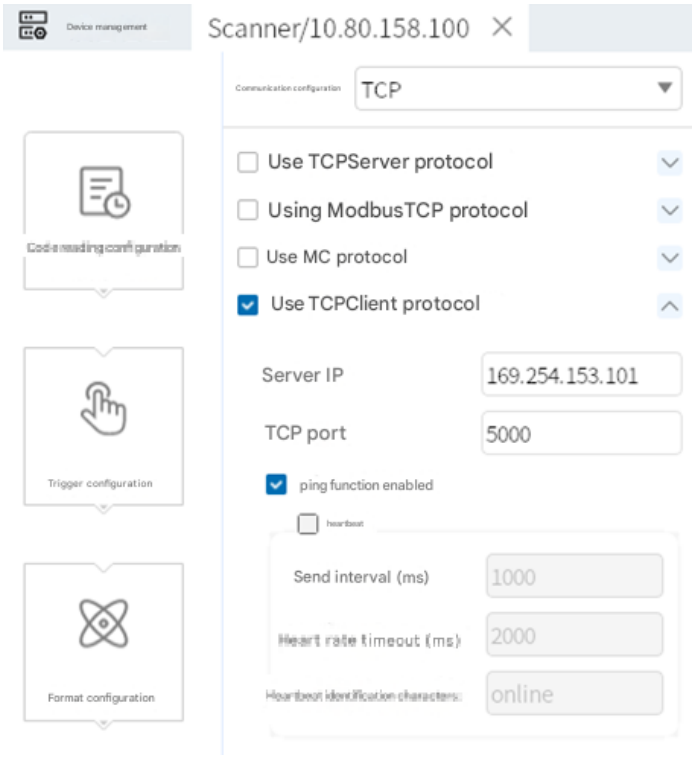

EtherNet/IP

Requires configuration of:

- **Input Assembly Size**: Size (in bytes) of data sent from the reader to the PLC.
- **Output Assembly Size**: Size (in bytes) of data sent from the PLC to the reader.
- **Network Connection Bit**: Alternating bit used by the PLC to verify an active connection.

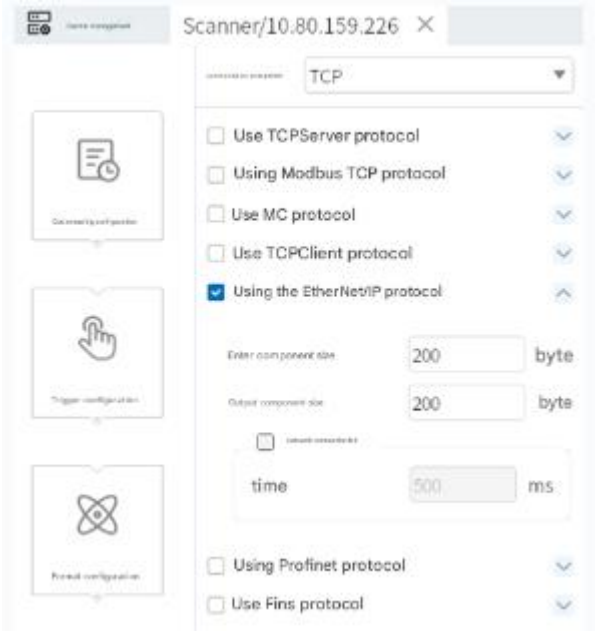

Profinet

Requires configuration of:

- Profinet Device Name: The unique device name for the reader on the Profinet network.

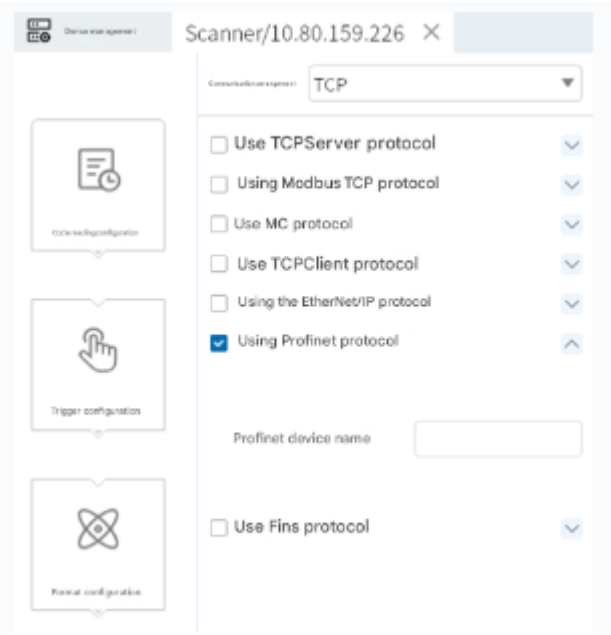

Fins

Requires configuration of:

- **Protocol Type:** TCP or UDP.
- **PLC IP:** IP address of the Omron PLC.
- **Port:** Port number for the FINS connection.
- **Node Address:** Node address of the device.
- **DM Start Address:** Starting address in the PLC DM area.
- **DM Area Length:** Length of the DM data area.
- **Control Area Result:** Specifies whether the control area uses DM or CIO.
- **Control Area Start Address:** Starting address of the control area.
- **Data Area Start Address:** Starting address of the data area.

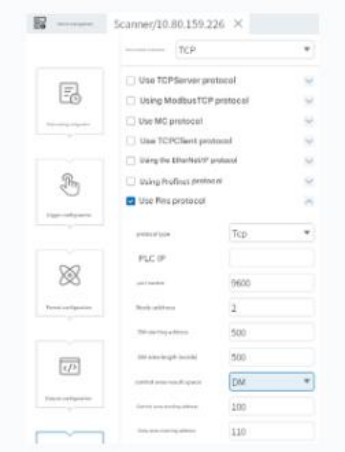

HTTP

Requires configuration of:

- **URL**: The target URL to which the reader will send data via an HTTP POST request.
- **Data Type**: The format of the data to be sent.



Serial Protocol

When Serial is selected, parameters include:

- **Baud Rate:** Serial communication speed.
- **Parity:** None, Even, or Odd.
- **Data Bits:** Number of data bits per character.
- **Stop Bits:** Number of stop bits.
- **Output Delay:** Character-level delay for slower serial devices.

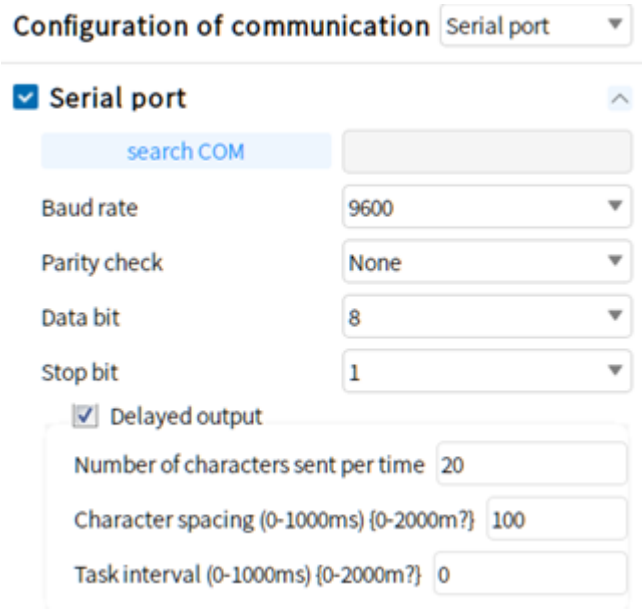

Modbus RTU

Requires configuration of:

- **Device Station ID:** Reader station ID on the Modbus RTU network.
- **Data Address:** Starting register address for result data.
- **Data Length:** Length of the data register block.
- **Trigger Address:** Register address used for triggering.
- **Trigger Length:** Length of the trigger register block.

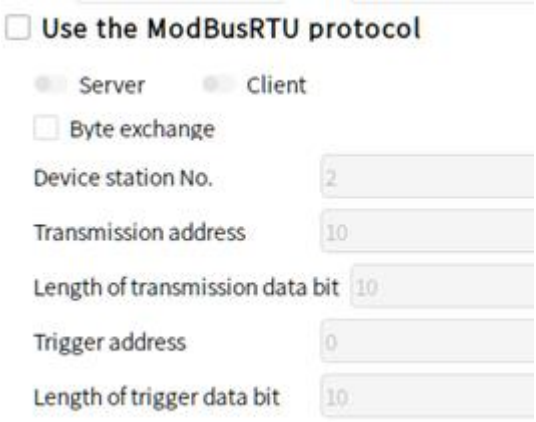

Device Management

Options include:

- **Save Settings:** Saves the current parameter set to one of 10 available user configuration slots.
- **Load Settings:** Loads a previously saved configuration from one of the 10 slots.
- **Save as Default:** Overwrites the device's power-on default configuration with the current settings.
- **Restore Default:** Reverts the device's active configuration to the user-saved default.
- **Restore Factory Settings:** Resets all parameters to their original factory state.

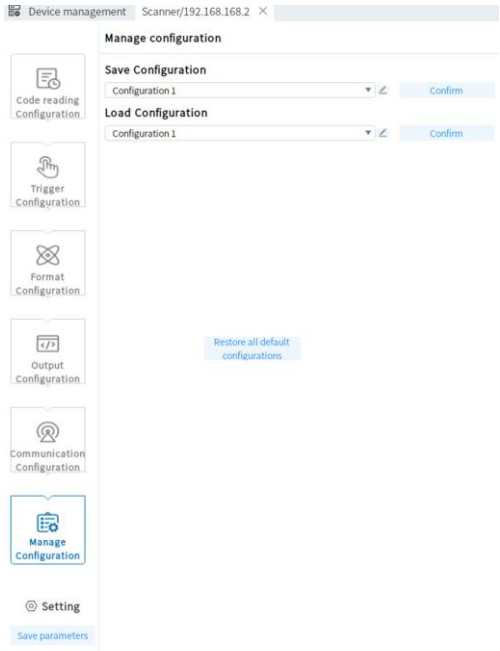

Settings

Device Settings

- **Device Name:** Allows customization of the reader's name for easy identification within software tools and on the network, especially useful in multi-device deployments.
- **Networking:** Provides configuration options for multi-reader environments, including **group network result numbering** and settings that allow the host to receive **connection status updates** from each reader.
- **Triggering:** Enables or disables **continuous triggering** and **software-triggered result transmission**, as well as collection of **missed trigger statistics** for performance monitoring and diagnostics.
- **Connection:** Supports **auto-connect on software startup** to the current PC, reducing setup time. Users can select between **Virtual NIC (RNDIS)** and **Virtual Serial Port** connection modes depending on system integration requirements.
- **Buzzer:** Configures the audible feedback behavior of the device, with options for **Off**, **On Success**, or **On Success/Fail**. The buzzer duration can be set to **Short**, **Medium**, or **Long** to suit different operating environments.
- **Buttons & Lights:** Allows individual enabling or disabling of physical controls and indicators, including the **Trigger button**, **Function button**, **Positioning light**, and **Status indicator light**,

providing flexibility for different operational or safety requirements.

- **Image Transfer:** Selects the format used when transferring captured images, including **PNG** or **JPG**, as well as **Center Crop** or **ROI Crop**, enabling optimization for bandwidth, storage, or diagnostic use.
- **Render / FTP / HTTP Settings:** Additional configuration sections for **image rendering**, **FTP transfer**, and **HTTP communication**, allowing integration with external systems, servers, or visualization tools.

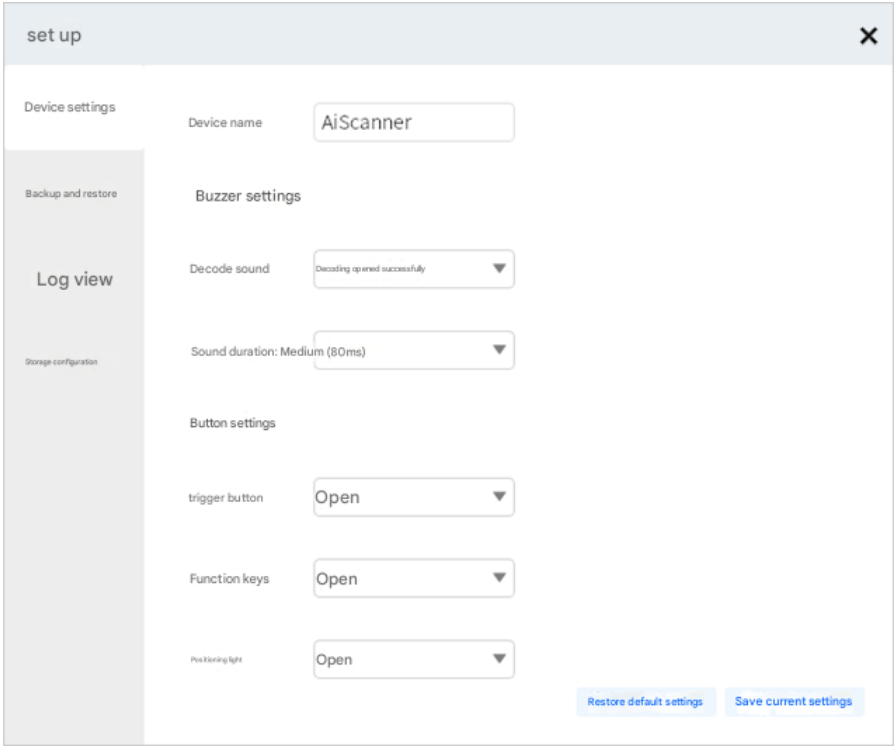

Firmware Update

Select the firmware file and click Upgrade to complete firmware update.

Backup & Restore

Back up device settings to PC, restore settings, or reset to factory defaults.

Log

Supports viewing logs with levels: ERROR, WARN, INFO, DEBUG. Options include Refresh, Clear, and Export.

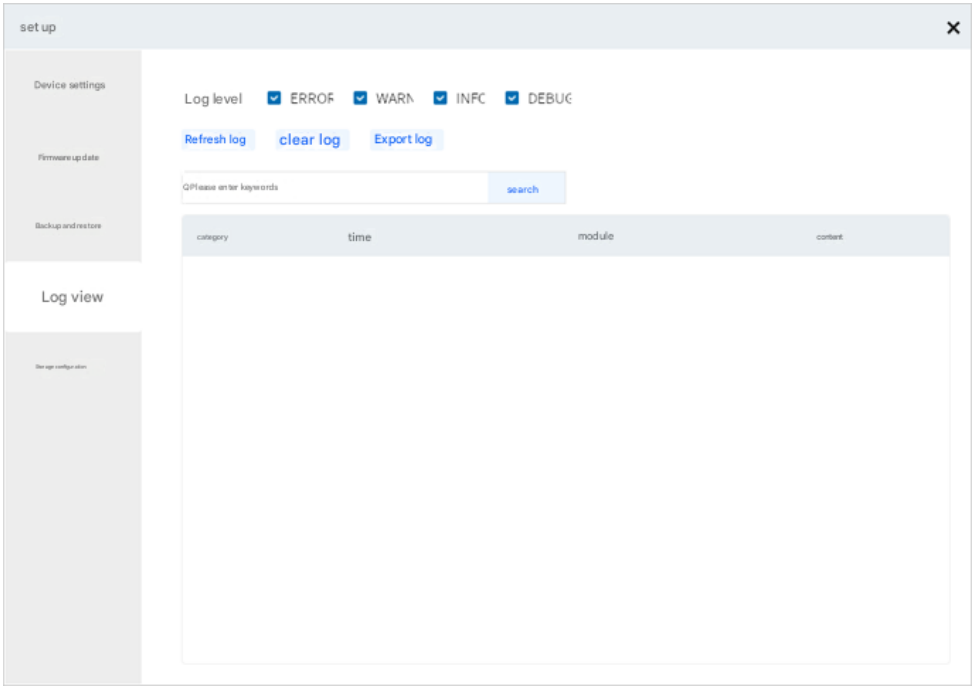

Storage Settings

- **Device Storage**: Enable/disable data logging, decoded images, undecoded images, and raw images.
- **PC Storage**: Select custom save path.
- **Capture Settings**:
    - Save path
    - Capture interval: 1 s–60 min
    - Capture count: 2–10000 images

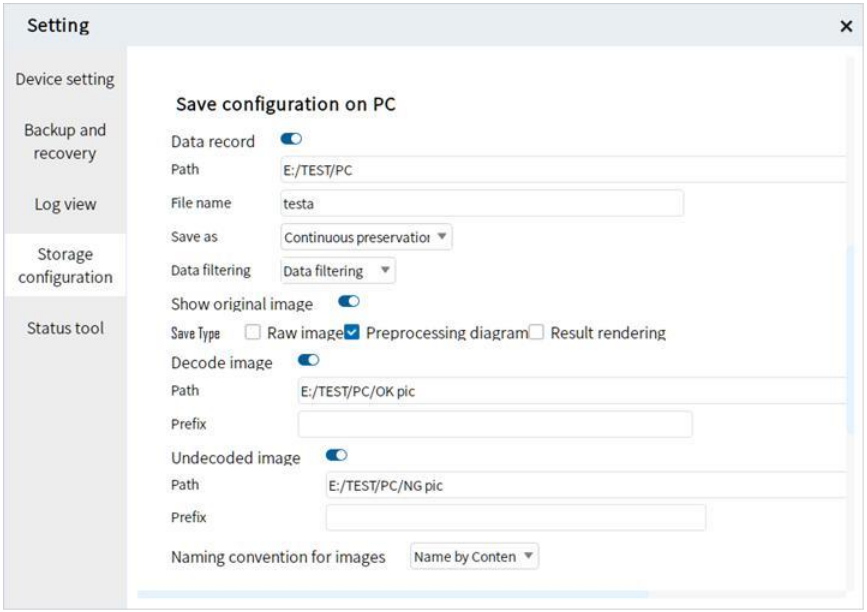

Status Tools

- **I/O Status Tool:** A diagnostic tool to monitor and log the real-time state of the digital input and output signals.
- **Communication Status Tool**: View the live status of communication registers for EtherNet/IP, Profinet, and Modbus TCP protocols.

While these comprehensive settings provide extensive control, issues can sometimes arise during setup. The next chapter addresses some of the most common problems and their solutions.

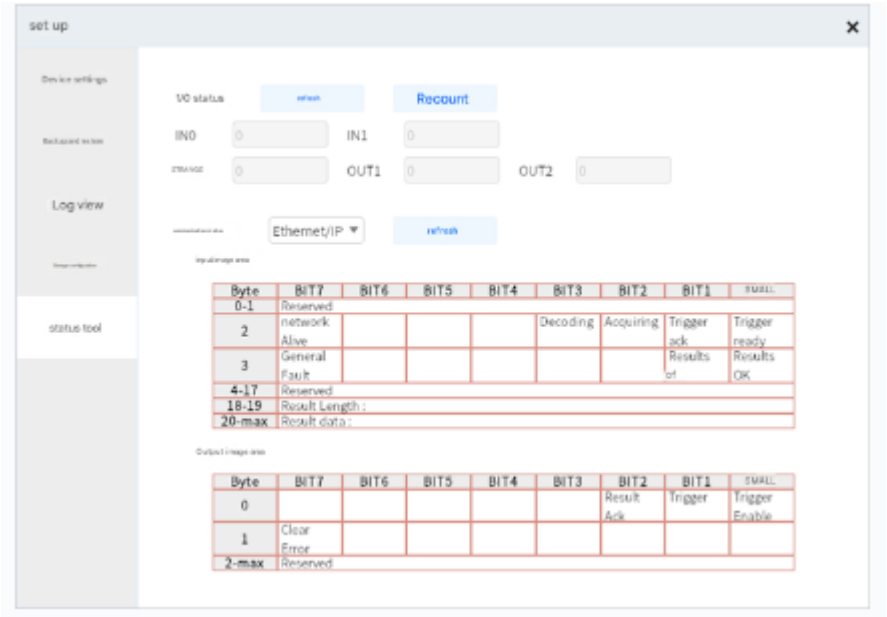

Frequently Asked Questions

Device Recognized but "Unreachable"

- **Possible Causes:**

    1. The device's IP address is not on the same subnet as the PC's network adapter.
    2. The PC's network adapter has acquired two IP addresses from different subnets, causing a routing conflict.

- **Solutions:**

    1. Modify either the device's IP address or the PC's IP address to ensure they are on the same subnet (e.g., PC at 169.254.153.10 and device at 169.254.153.0).
    2. Open the Command Prompt on your PC as an administrator. Execute the command netsh winsock reset and then restart your computer. This will reset the network stack and resolve potential conflicts.

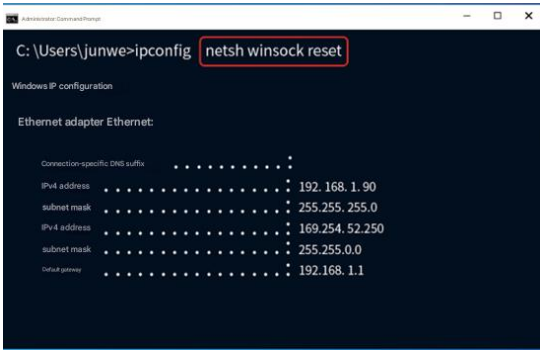

Debug Mode Settings Not Saved

- **Possible Cause:** The system temporarily holds parameter changes in active memory but requires a manual action to write them to permanent storage.
- **Solution:** After making your changes, navigate to the **"Configuration Management"** section and click the **"Save All Settings"** button to permanently save the current configuration to the device.

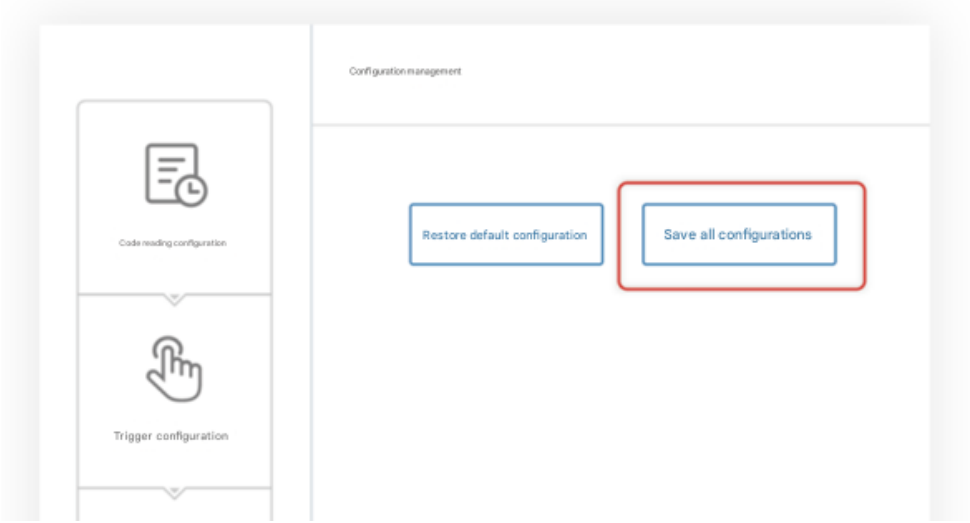

Barcode on Metal/PCB Cannot Be Read

- **Possible Cause**: Low brightness, high reflectivity.
- **Solution**: Increase **Light Source** or **Gain**, adjust angle and exposure.



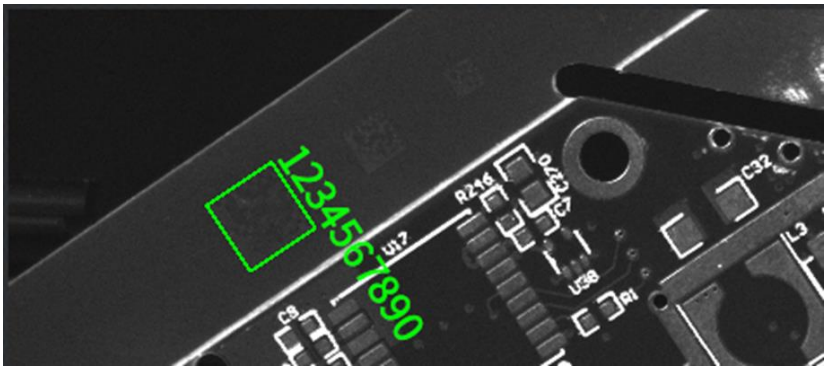

Small Barcode Cannot Be Recognized

- Cause: Insufficient resolution (PPM too low). 1D codes require **PPM ≥ 2**, QR codes require **PPM ≥ 3**
- Solution: Move the reader closer.

Using Different Trigger Modes

- Network Trigger: Same port/IP, verify with third-party software
- IO Trigger: Connect lines, configure NPN/PNP
- Serial Port Trigger: Configure DB9, baud rate, data bits, stop bits
- Software Trigger: Ensure same network segment

Network Trigger Failure

- Cause: Device only supports client mode.
- Solution: Adjust PLC device network trigger mode.

How to Use Different Trigger Modes

- **Network Trigger:** Ensure the software is set to Network Trigger mode. Use a third-party tool (like a TCP test utility) to verify that your PLC or host PC can send the trigger command. Confirm that the port and trigger command string match the device's configuration and that both devices are on the same IP subnet. If using a router, ensure that IP isolation features are disabled.
- **IO Trigger:** Physically connect the trigger signal wire to the correct input pin (LINE_IN0 or LINE_IN1). In the software, set the mode to

IO Trigger and ensure the selected line and trigger type (rising/falling edge) match your hardware signal. Verify that the NPN/PNP wiring is correct as described in Chapter 3.2.

- **Serial Trigger:** Connect the DB9 serial cable. In the software, ensure the correct COM port, baud rate, data bits, stop bits, and parity are all configured to match the settings of your host device. Verify that the trigger command string is also identical.