• Product availability and specifications depend on territory market strategy; all are subjects to change without prior notice.
• ZEBEX is the trademark of ZEBEX INDUSTRIES INC, all rights reserved.

ZX-3050

2D Image Fixed Industrial Scanner

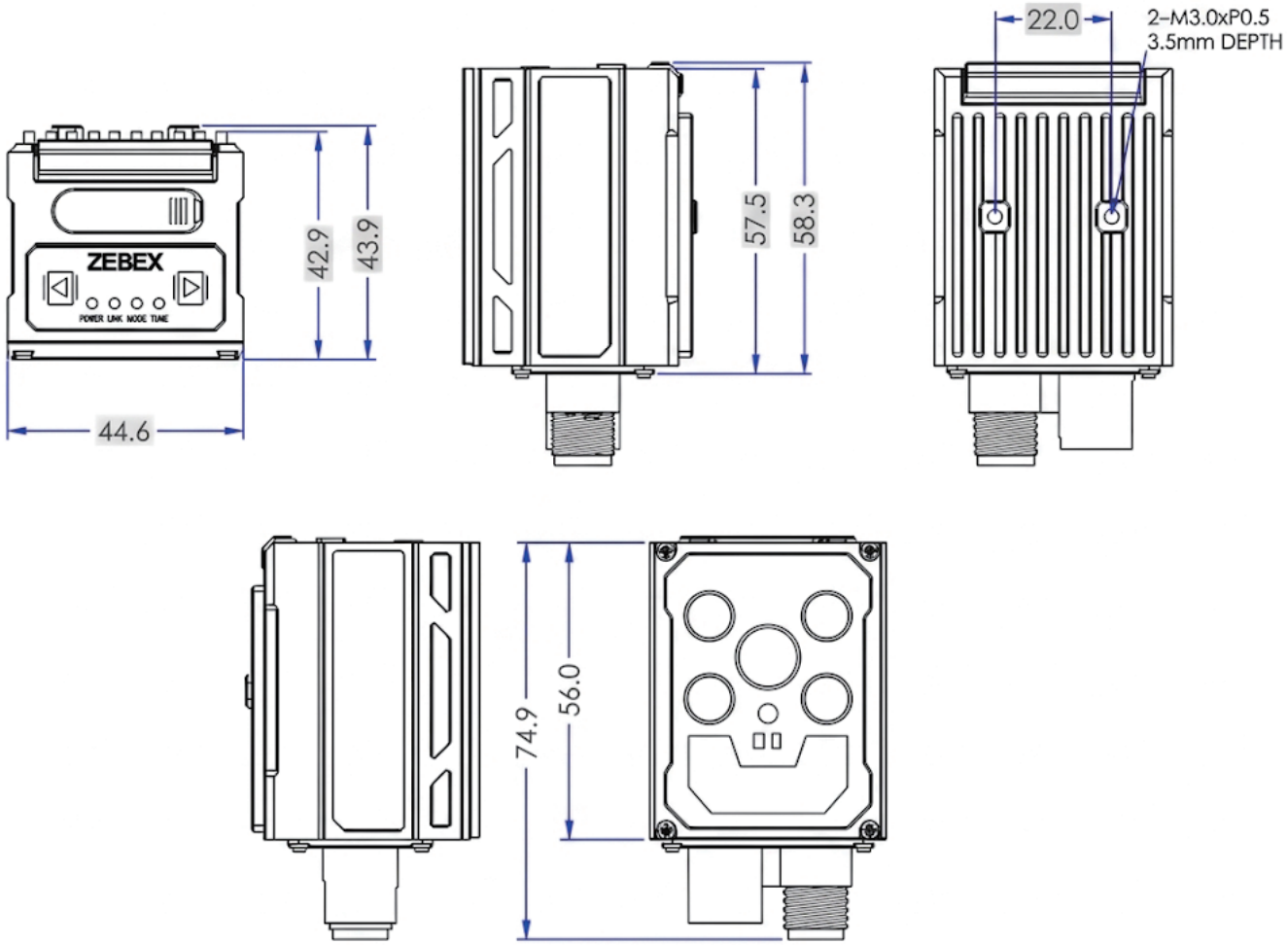

Units : mm (inch)

Ver. 2026/09/21

A. B1F.-1, No. 207, Sec. 3, Beixin Rd, Xindian Dist, New Taipei City 23143, Taiwan T. +886-2-8913 2598 F. +886-2-8913 2596 E. mail@zebex.com W. www.zebex.com